FRYER

MADE IN USA

	MB-Q SERIES SPECIFICATIONS	MB-14Q	MB-16Q
MACHINE CAPACITY	X Travel	40”	60”
	Y Travel	20”	25”
	Z Travel	20”	24”
	Table Load (Evenly Distributed)	2,450 lbs.	2,950 lbs.
	Ball Screw Size	1.26”	1.57”
	Table Size	16” x 54”	18” x 70”
	T-Slots (No./Width)	3 / 0.630”	5 / 0.630”
	Table Top to Floor	33”	36”
SPINDLE	Motor HP (Peak)	10.0 HP	
	Max Spindle Torque	40.5 ft/lbs. High Gear; 238 ft/lbs. Low Gear	
	Spindle Speed (RPM)	Low 10-500; High 100-4,500	
	Speed Ranges	2-Speed Gear Box	
	Tool Type/Taper	CAT 40 (NST-40 or BT-40 Optional)	
	Quill Diameter	4.125”	4.330”
	Quill Travel	6.0”	6.0”
	Spindle Nose to Table (Max to Min)	26” - 6”	30” - 6”
	Spindle Center to Column	20”	25”
	Head Swivel	+/- 90°	+/- 90°
PERFORMANCE	Positioning Accuracy	+/- 0.0002”	
	Positioning Repeatability	+/- 0.0001”	
	Rapid Traverse	400 IPM	
	Cutting Feed Rate	0.001 - 300 IPM	
	Axis Thrust (Peak)	4,400 lbs.	
GENERAL INFO	Air Pressure Requirements	85 PSI; 3 CFM	
	Coolant Capacity	12 Gallons	
	Coolant Flow	3 Gal/Min	
	Power Requirements	40 AMP; 208-240 VAC 3 PHASE (430-500 Optional)	
	Shipping Dimensions* (WxDxH)	84” x 84” x 103”	90” x 84” x 103”
	Operating Dimensions (WxDxH)	113” x 76” x 96	170” x 82” x 105”
	Machine Weight	6,000 lbs.	8,000 lbs.

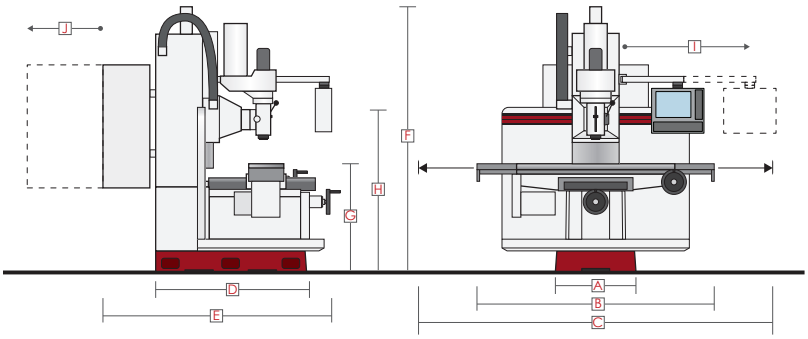

	MB-14Q	MB-16Q
Floor Width (A)	26"	33"
Overall Width (B)	82"	111"
X-Axis Movement (C)	113"	174"
Floor Depth (D)	56.5"	66"
Overall Depth (E)	82"	93"
Maximum Height (F)	103"	107"
Floor to Table Height (G)	33"	36"
Floor to Console Height (H)	62"	62"
Console Swing Radius (I)	60"	42"
Electrical Cabinet Swing Radius(J)	37"	36"
Approx. Machine Weight	6,000 lbs.	8,800 lbs.

* Requires some disassembly to meet these minimum dimensions. Contact factory for more information.

FRYER MACHINE SYSTEMS
The Toolroom Company

© 2016 Fryer Machine Systems, Inc. rev 123051
Specifications subject to change without prior notice.

70 Jon Barrett Road ▪ Patterson, NY 12563 ▪ USA ▪ www.fryermachine.com ▪ 845-878-2500