Ver 1.3

FRYER MACHINE SYSTEMS

Precision Built Solutions™

MC-B SERIES
FRYER / SIEMENS 828 CONTROL

MAINTENANCE MANUAL

MADE IN USA

FRYER MACHINE SYSTEMS

Precision Built Solutions™

70 Jon Barrett Road, Patterson, NY 12563, USA | www.fryermachine.com | v: 845.878.2500 | f: 845.878.2525

TABLE OF CONTENTS

1.0 - SAFETY INFORMATION

Safety Information 4
1.01 Mechanical Safety 5
1.02 Electrical Safety 6

2.0 - BASIC INSTALLATION

2.1 WHERE TO PLACE YOUR MACHINE

2.11 Foundation 7
2.12 Environmental Conditions 7
2.2 Unloading Your Machine 7
2.3 RECEIVING YOUR MACHINE 7
2.4 UNPACK AND PLACE YOUR MACHINE 8
2.5 PRIOR TO THE ARRIVAL OF THE TECHNICIAN

2.51 Installation Safety Instructions 8
2.52 Cleaning & Lubricating Machine 8
2.53 Line Voltage Check 8
2.54 Electrical Precautions 8
2.6 LEVELING THE MACHINE

2.61 Leveling Procedure 10

3.0 - GENERAL INFORMATION

3.1 MAINTENANCE SCHEDULE CHART 12
3.2 MACHINE COMPONENTS

3.21 Axis Lubrication System 13
3.22 Electrical System 13
3.23 Pneumatic System 14
3.24 Automatic Tool Changer 15
3.25 Spindle 16
3.26 Flood Coolant System 16
3.27 Fryer Tool Probe 17
3.28 Fryer Part Probe 18
3.3 BASIC MACHINE PROCEDURES

3.31 Set Axis Home Position 19
3.32 Check Axis Backlash 20
3.33 Adjusting Backlash Compensation 21
3.34 Working with Waycovers 21
3.35 Check / Adjusting Ballscrew Endplay 22
3.36 Check Axis Belts 22

4.0 - 828 CONTROL

4.1 ACCESSING MACHINE PARAMETERS 23
4.2 ACCESSING THE SOFTWARE VERSION 23
4.3 REVERT TO THE FACTORY SET PASSWORD 23
4.4 ADJUSTING INPUT VOLTAGE PARAMETERS 24
4.5 M-CODES 25
4.6 ALARMS

4.61 Siemens Alarms 26

4.62 Fryer PLC Alarms and Descriptions *26*
4.63 Clearing an Alarm *27*
4.7 WORKING WITH FILES
4.71 File Types *27*
4.72 Back-Up An 828 Archive File to A USB Stick *27*
4.73 Reloading an Archive File *27*
4.74 Backing Up Tool Data on the 828 Control *28*
4.8 ADDING A SOFTWARE OPTION TO AN 828 CONTROL *29*
4.9 SET UP THE NETWORK DRIVE IN AN 828 ..... *31*
5.0 – ARM STYLE ATC OPERATION & MAINTENANCE
5.1 ELECTRIC ARM TYPE ATC OPERATION & REPAIR
5.11 Safety Rules -- READ BEFORE OPERATING ATC *32*
5.12 Manual Operation of the Tool Changer *32*
5.13 Setting Tool Change Height *33*
5.14 Recovering from a Tool Change Failure *33*
5.15 ATC HOME Position and Tool Bin# Reset *34*
5.16 Spindle Orient Adjustment *34*
5.17 Arm alignment *35*
Control Element Position Explanation Drawing *36*
Sequence Diagram of Electric Action *37*
Control Circuit Reference Diagram *38*
Motor & Switch Wiring Diagram *39*
Air Pressure Switch Wiring Diagram *40*
Wire Junction Box Drawing *41*
Wire Box Drawing *42*
Main Assembly Dimensional Drawings *43*
DEX–2 Time Chart *44*
Adjustment of Arm *45*
Power Output Direction Diagram *46*
ATC Gear Oil Specifications *47*
ATC Repair Procedures *47*
ATC Troubleshooting *48*
ATC Maintenance *49*
5.18 Tool pot replacement procedure *49*
5.19 Replace ATC magazine motor *52*
5.20 Replace arm motor *52*
5.21 Cylinder replacement *52*
5.22 Induction switch replacement *52*
5.23 Replacing proximity switch for tool magazine *52*
5.24 Replacing proximity switch for the arm *52*
5.25 Notes *52*
ATC Magazine Maintenance Points *53*
6.0 – DRAWINGS AND PARTS LIST
828 CONTROL ELECTRICAL PANEL LAYOUT *55*
828 FRONT CONSOLE LAYOUT *56*
ELECTRIC ARM TYPE ACT DRAWINGS *57*
ELECTRIC ARM TYPE ACT PARTS LIST *60*

ELECTRIC ARM TYPE ACT INPUT SHAFT DRAWING *63*
ELECTRIC ARM TYPE ACT OUTPUT PART & MOTOR PART DRAWING *64*
ELECTRIC ARM TYPE ACT SIGNAL PARTS DRAWING *65*
ELECTRIC ARM TYPE ACT ROCKER PARTS & IDLER SPROCKET DRAWING *66*
MC-B Z-AXIS COLUMN ASSEMBLY DRAWING & PARTS LIST *67*
MC-B X-AXIS TABLE ASSEMBLY DRAWING & PARTS LIST *69*
MC-B Y-AXIS BASE ASSEMBLY DRAWING & PARTS LIST *72*
MC-B HEAD ASSEMBLY DRAWING & PARTS LIST *75*
MC-B SERIES SHEETMETAL ASSEMBLY DRAWING & PARTS LIST *78*

1.0 SAFETY INFORMATION

READ BEFORE INSTALLING OR OPERATING

NOTE: THIS MACHINE IS AUTOMATICALLY CONTROLLED AND MAY START AT ANY TIME.

All CNC machines contain hazards from rotating parts, belts and pulleys, high voltage electricity, noise, and compressed air. When using CNC machines and their components, basic safety precautions, including all appropriate LOTO procedures must always be followed to reduce the risk of personal injury and mechanical damage.

It is the machine owner's responsibility to make sure all personnel who are involved in installation and operation of this machine are thoroughly acquainted with the procedures and safety instructions provided herein *BEFORE* they perform any actual work.

Only Fryer factory-trained service personnel should troubleshoot and repair the equipment.

Do not modify or alter this equipment in any way without first consulting Fryer Machine. Any modification or alteration of this equipment could lead to personal injury and/or mechanical damage and could void your warranty.

EMERGENCY STOP (E-STOP) BUTTON

PRESSING THE EMERGENCY STOP BUTTON WILL INSTANTLY STOP ALL MOTION OF THE MACHINE, THE SERVO MOTORS, THE TOOL CHANGER, AND THE COOLANT PUMP.

1. Keep machine and area around it clean and well lit. Never allow chips, coolant, or oil to remain on the floor. Do not leave loose objects on or around machine.

2. Use appropriate eye and ear protection while operating the machine. ANSI-approved impact safety goggles and OSHA-approved ear protection are recommended to reduce the risks of eye injury and hearing loss.

3. Keep all loose clothing, hair, and jewelry away from the machine at all times.
4. Gloves are easily caught in moving parts. Take them off before using the machine.
5. Always wear safety shoes with steel toes and oil-resistant soles.
6. Do not paint, alter, deface, or remove any warning plates from the machine. Replacement plates are available from Fryer Machine Systems.
7. Keep flammable liquids and materials away from the work area and hot chips.
8. Coolant and oils can make surfaces on the machine slippery. They can also present an electrical hazard if the machine has power on. Therefore, do not stand on any part of the machine at any time.
9. Keep vises, clamps, fixtures, or work pieces from extending beyond the back edge of the table.
10. Check for damaged parts and tools before operating the machine. Any part of a tool that is damaged should be properly repaired or replaced. Do not operate the machine if any component does not appear to be functioning correctly.
11. Improperly clamped parts machined at high speeds/feeds may be ejected and puncture the safety door. Machining oversized or marginally clamped parts is not safe.
12. To avoid tool changer damage, ensure that tools are properly aligned with the spindle drive lugs when loading tools.
13. Windows must be replaced immediately if damaged or severely scratched – contact the factory for replacement panels.
14. Do not attempt to operate the machine before all the installation instructions have been completed.
15. Be sure to review the maintenance section of this manual for instructions to keep your machine running properly.

1.01 Mechanical Safety

1. Always press Emergency Stop when the machine is not in use.
2. Never operate the machine with any cover or shield open or removed.
3. Never reach into the work area when the spindle is turning or if the machine is in automatic mode.
4. Put the machine in manual mode and be sure last programmed function has been completed before reaching inside of the work area.
5. The functions of the machine make it impossible to eliminate all pinch points. Be particularly aware of the following pinch points:
    a. Spindle and tool rotation
    b. Indexing of ATC and tools
    c. Table, saddle, and head.
6. Do not operate machine without axis motor covers or axis waycovers in place.
7. Report any loose, worn, or broken parts to your supervisor. The same action should be taken if any unusual noise or machine action occurs.
8. The electric components are protected from normal moisture resulting from humidity or use of water-based coolants. **DO NOT** however, use a water hose to clean the machine or the area around it.
9. Never touch a machine control device or electrical component when your hand is wet.

10. Never clean up chips while the machine is running or is in automatic mode.
11. Do not file workpieces being rotated under power.
12. At the end of the workday the machine should be placed in "EMERGENCY STOP MODE"
13. When restarting a machine after it has been shut down always assume it has been altered. Recheck all phases of the job as though you were running the first piece.
14. Never run the spindle until hands, feet, and body are well clear of the work area.

1.02 Electrical Safety

1. **WARNING**: Electrical enclosures contain high voltage. Disconnect equipment from power source before opening cabinets.
2. **Before replacing a fuse, switch off the machine.**
3. ***Immediately turn off power if:***
    - Power problems develop
    - In the event of electrical storms.
    - Ambient temperatures exceed 105 degrees Fahrenheit (40 degrees C)
4. The electrical power must meet the specifications in this manual. Attempting to run the machine from any other source can cause severe damage and will void the warranty.
5. The electrical panel should always be closed and locked except during service.
6. When the main circuit breaker is on, there is high voltage throughout the electrical panel and some components operate at high temperatures, therefore extreme caution is required.
7. Do not reset a circuit breaker until the reason for the fault is investigated.
8. Never service the machine with the power connected.

2.0 BASIC INSTALLATION

2.1 WHERE TO PLACE YOUR MACHINE

Thank you for choosing Fryer Machine Systems. You have purchased a high quality, custom crafted machine tool designed and built to provide years of trouble-free service. To ensure that your machine is properly installed we ask that you review the following information prior to the shipment of your machine.

2.11 Foundation

Your foundation must be a minimum 6"(150mm) thick concrete slab floor and should be placed on a single slab with no seams. Be sure to leave space around the machine for leveling components and access to the electrical cabinet.

If your floor does not meet these specifications, contact the factory for further recommendations.

Install the machine on the first or second floor. Take the stress of ceiling and foundation into careful consideration to ensure that the machine load can be offset.

2.12 Environmental Conditions

Generally, the machine will be installed in the following conditions. However, these may change over a period of time or in response to seasonal changes.

- Supply voltage: +/- 10% of voltage listed on serial number tag.
- Source frequency: ±2 Hz of frequency listed on serial number tag
- Temperature effects dimensional accuracy, therefore, ambient temperatures should not exceed 105 degrees Fahrenheit. Also avoid exposing the machine to direct sunlight or heat rays which can change the environmental temperature.
- Relative Humidity: Less than 80% (Temperature changes should not cause condensation)
- Atmosphere: Free from excessive dust, fumes, corrosive gases, and salt
- Avoid exposing the machine to abnormal vibration.

2.2 UNLOADING YOUR MACHINE

Fryer machines are shipped on skids designed for forklift offloading. Be sure your forklift is rated for the proper weight of the machine.

Note: If you are using a crane for offloading, please contact the factory in advance for instructions as damage can occur if supported in the wrong locations.

2.3 RECEIVING YOUR MACHINE

NOTE: If you have a door that is less than 8' wide x 10' high, please contact the factory prior to shipment so that we can make sure your machine is packaged to fit into your door openings.

1. Fryer machines are carefully packed to avoid damage in transit; however, we ask that you ***UNWRAP AND INSPECT YOUR MACHINE AS THOROUGHLY AS POSSIBLE PRIOR TO SIGNING THE BILL OF LADING***. If a digital camera is available, pictures should be taken before the machine is moved further. Pictures should be sent to service@fryermachine.com.

2. Place the machine in its location and complete inspection. If there is any damage to your machine, Fryer should be notified immediately. This will enable us to provide replacement parts before the service technician arrives install the machine.

3. If you have any questions about any of these installation instructions or other questions about your new Fryer Machine Systems machine, please call the Fryer Service Department and one of our trained technical staff will be happy to assist you.

2.4 UNPACK AND PLACE YOUR MACHINE

To make certain that your machine installation goes smoothly, it is important that the following items are completed **prior** to the arrival of the Fryer authorized service technician. This will ensure that our technician is able to provide you with the maximum amount of training during his allocated time with you.

1. Have your rigger move the machine to the operating location, remove it from the skid and install on ALL leveling pads.
2. Remove all packaging material and thoroughly clean the machine and inspect for hidden damage.
3. Remove all large assemblies from skids and stage next to machine to facilitate ease of assembly.
4. Install leveling pads and level machine. Level with a precision level, using the leveling screws and pads provided with the machine.

2.5 PRIOR TO THE ARRIVAL OF THE TECHNICIAN

2.51 Installation Safety Instructions

Initial start-up of the machine must be performed by a Fryer Machine Systems authorized service technician.

2.52 Cleaning & Lubricating Machine

All protective coatings (cosmoline) must be removed before using the machine.

Be cautious when selecting a suitable cleaning agent. Paraffin applied with a clean brush will soften the protective coating. The protective coating can then be removed with clean rags.

- WD-40 or a similar product is recommended for cleaning the machine. Do not use gasoline or any other flammable solution to clean the machine.
- Clean all exposed ways of the bed and saddle.

2.53 Line Voltage Check

Line voltage must be ± 10% of the voltage listed on the serial number tag.

INITIAL POWER-UP SHOULD ONLY BE PERFORMED BY A FRYER TECHNICIAN OR FACTORY AUTHORIZED REPRESENTATIVE.

2.54 Electrical Precautions

ELECTRICAL SCHEMATICS FOR YOUR MACHINE ARE LOCATED IN THE ELECTRICAL CABINET AND IN THIS MANUAL.

Wiring

1. Ensure that all local electrical codes are met.
2. Do not connect to the power distribution panel any power cables for devices that can cause line noise, such as welders and high frequency quenching machines.

Grounding

You should always refer to your local electrical code to be sure you are grounding to code. Generally, use a grounding

wire with a cross section of more than 14 mm and a resistance to ground of less than 100 ohms. This wire size should be greater than AWG (American Wire Gauge) No. 5 and SWG (British Legal Standard Wire Gauge) No.6.

Generally, the machine should be grounded to a separate grounding rod. If an independent ground cannot be provided for the machine, prepare the ground connection as follows:

1. Connect a single conductor to its own grounding terminal. This will avoid possible serious accidents resulting from ground currents that might otherwise flow in the NC machine if a peripheral device should malfunction.
2. Be careful when using concrete reinforcing rods as grounding points. These reinforcing rods often are used to ground equipment because they usually offer a resistance to ground of less than 100 ohms. In doing so, make the connection as follows: (This also applies to connecting ground wires to regular grounding terminals)
3. Do not use the same grounding reinforcing rod or grounding terminal for other devices since this could lead to line noise such as produced electric welders and high frequency quenching machines.
4. Use a grounding terminal with an adequate electrical performance rating and which is durable.
5. A separate grounding wire should be used, one whose length is as short as possible.
6. Check the resistance to ground by actual measurement.
7. This should measure less than 100 ohms if the single device is connected to its own grounding rod.

Desirable Independent Grounding: Earth resistance: Less than 100 ohms **Common Grounds:**

Resistance to ground = 100/the number of devices connected to the grounding (Ω)

NEVER GROUND EQUIPMENT IN SERIES!

Connection of Power Line

NOTE: Electrical installation should only be completed by a qualified electrician.

1. Make sure that the incoming power is compatible with the requirements of the machine tool (voltage, amperage, phasing). All this information can be found on the machine's serial number tag.
2. Power wires, grounding and over-voltage protection should comply with the local electrical code.
3. **DO NOT** connect if the incoming power is different from the power requirements of the machine. Contact a qualified electrician.

2.6 LEVELING THE MACHINE

Before attempting to use the machine, it will be necessary to accurately level it.

- Screw the leveling bolts (with nut) into the holes in the base of the machine. Set a leveling pad under.
- Please prepare the following tools to adjust machine level:
    - Precision level (0.0005”/ft. or 0.013mm/1000mm accuracy)
    - Two adjustable wrenches
- Clean the bed way and cross slide surfaces thoroughly and set one of the precision levels on the flat bed way in the longitudinal direction, and the other on the cross slide, perpendicular to the first (if there is only one level available, then use it on both directions alternately).
- Adjust the leveling bolts located the bottom of the machine base until the machine is leveled to within 0.001”/ft. (0.08mm/1000mm) in both directions.
- Lock the nuts on the leveling bolts, and re-check to see whether the level of machine is still correct. Repeat as necessary until machine level is obtained with leveling bolts locked.
- After initial installation, check the level once a week for the first month, then check monthly thereafter.

2.61 Leveling Procedure

Step 1

- Set up your precision level in the middle of the machine table parallel to the X-axis.
- With the table centered in the X and Y-axis, adjust the machine’s four outside leveling studs to achieve level.
- Be sure that the center leveling pads are not touching and that all four outside pads have load.
- Also check to make sure that the machine casting is not touching the floor.

Step 2

- Now rotate the level 90 degrees so it is parallel to the Y-axis and again check level.
- Adjust the four outside leveling studs as needed.
- If any adjustments are required to achieve level, you must go back and re-check level with the level parallel to the X-axis.
- Repeat the adjustment process until the machine is perfectly level with the level parallel to both axes without further adjustment.

Step 3

- Adjust the center leveling studs until they are just touching.
- Again, verify the machine is level with the level parallel to both axes without further adjustment.

Step 4

- With the level parallel to the X-axis, slowly move the table back and forth over full Y-axis travel check to see that the level does not change. Make any required adjustments to achieve level.

Step 5

- Re-center the table in the Y-axis and again verify that the machine is level with the level parallel to both axes.
- Check that all leveling pads have some degree of load.
- Lock the nuts on the studs once the correct level is achieved.

Step 6

- The final check is “tramming” of the head. This is accomplished by mounting the indicator base on the spindle nose and setting the indicator tip on the tabletop at position “0” shown below. Properly load the indicator tip and zero the indicator at position “0”. Sweep the indicator tip by rotating the spindle manually over a 12” diameter circle. The indicator should show no more than .0005” total indicator reading. Record the values found at positions 1, 2, and 3.

	TABLE SWEEP	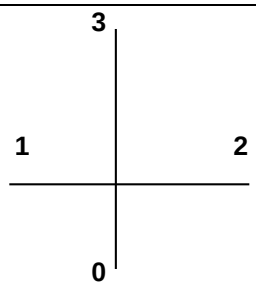	**.0005” OVER 12” DIAMETER IN X-Y AXIS**	**1.** **2.** **3.**

3.0 GENERAL INFORMATION

3.1 MAINTENANCE SCHEDULE CHART

***FOR FURTHER MAINTENANCE DETAIL, REFER TO THE MACHINE COMPONENT SECTIONS IN THE MANUAL LISTED BELOW.**

CAUTION! Always follow all Lock Out / Tag Out procedures before performing any maintenance

MAINTENANCE ITEM	RECOMMENDED	Daily	Weekly	6 Mo	As Required
Check air pressure gage	90 – 125 PSI	X			
At the end of the day remove and dispose of chips	Use of brush or vacuum is recommended. Do not use air as it can push chips into waycovers and ballscrews.	X			
Check axis lubrication pump oil level	See Section 3.201 – Use Mobil Vactra #2 (ISO 68) or equivalent	X			
Clean chips from interior of ATC	See Section 3.204 for details		X		
Check pneumatic (air) lubrication oil	Add Mobil ALMO break free synthetic air tool oil (5W-10W)		X		
Check coolant level	Complete a visual inspection		X		
Check machine level	See Section 2.61 for details			X	
Check axis backlash	See procedure in Section 3.43			X	
Remove and clean underside of waycovers / check sliders and bumpers for wear and/or damage	See Section 3.44 for details			X	
Check wipers for adjustment / damage	See Section 3.44 for details			X	
Check ballscrew endplay	See procedure in Section 3.45			X	
Check axis motor belts	See procedure in Section 3.46			X	
Grease ATC cam pockets	See Section 3.24 for details			X	
Change coolant	Blasocut BC40 NF-PL or equivalent				X
Check and change electrical cabinet air filters	Use Purolator A23465 air filters				X
Change ATC gearbox oil	Mobilgear 600XP 150, Shell Omala EP 150-220 or equivalent				Yearly
Chiller fluid	Oil Chiller: VG-32 Oil				Yearly

3.2 MACHINE COMPONENTS

3.21 Axis Lubrication System

- The automatic way lube system is controlled by the PLC in the control. The system only pumps way oil when the spindle and axes are moving. If there is no machine movement the pump will not pump unnecessary oil. This method greatly reduces way lube usage and keeps oil out of the machine coolant sump and prevents fouling.

For illustrative purposes only. Your specific machine's lubrication pump may be different.

- If the machine has been unused for more than 48 hours press the blue pushbutton on the side of the lube tank for approximately 30 seconds to pump oil to the ways. The pressure gage on the tank will indicate if it is working properly.
- If the system detects low way lube it will display the following message in the control: **700040 - WAY OILER PRESSURE FAULT**

3.22 Electrical System

- Schematics (1) – The Electrical and Pneumatic Schematics are inside electrical cabinet
- Cabinet Filter Type (2) – Purolator A23465 or equivalent
- Check Filter Interval - Weekly
- Change Filter Interval – As Required (depending on environment)

3.23 Pneumatic System

- Pneumatic Schematics for your machine are located in electrical cabinet door pocket(see previous page)
- A list of the different solenoids and pressure settings is located on a sticker where the solenoids are located.
- Some of the basic solenoids are listed below:
    - Air Gun
    - Air Pressure Switch
    - ATC Tool Pot Up
    - ATC Tool Pot Down
    - Drawbar Solenoid
    - Spindle Air Blast (Option)
    - Spindle Bearing Purge (Option)
    - 4th Axis Brake (Option)
    - Spray Mist (Option)
    - Glass Scale Air Purge (Option)
    - Programmable Air Blast (Option)
    - 4th Axis Tailstock Brake (Option)

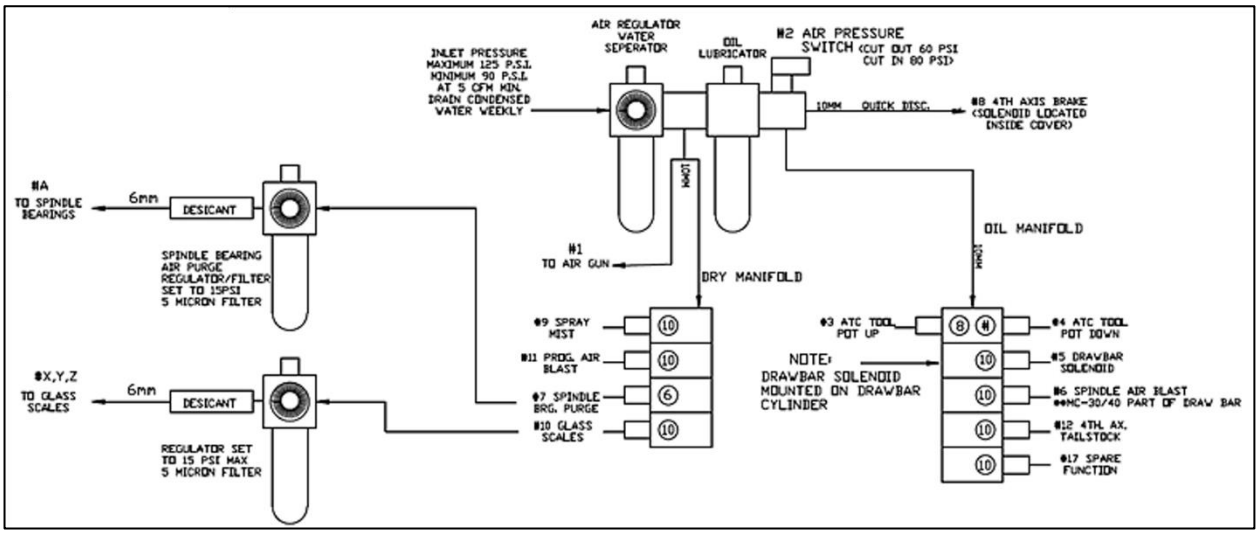

- Lubrication Requirements – Mobil Almo break free synthetic air tool oil 5W-10W or equivalent
- Check Lubrication Interval – Weekly – Add as needed

40 Taper 24-Position Arm Style Tool Changer

- Maximum Tool Diameter – 3.2”
- Maximum Tool Diameter with adjacent positions empty – 5.5”
- Maximum Tool Length – 11.8”
- Maximum Tool Weight – 15.4 lbs.
- Tool Change Time: 3 seconds

40 Taper 40 & 60-Position Arm Style Tool Changer

- Maximum Tool Diameter – 3.55”
- Maximum Tool Diameter with adjacent positions empty – 6”
- Maximum Tool Length – 11”
- Maximum Tool Weight – 17.5 lbs.
- Tool Change Time: 3 seconds

50 Taper 24 & 40-Position Arm Style Tool Changer

- Maximum Tool Diameter – 5”
- Maximum Tool Diameter with adjacent positions empty – 8.9”
- Maximum Tool Length – 11.8”
- Maximum Tool Weight – 35.25 lbs.
- Tool Change Time: 4 seconds

3.25 Spindle Information

Thermal expansion of the machine components can jeopardize machining accuracy. To prevent this condition always warm the machine up.

SPINDLE WARM UP – Use the chart below for daily startup

Warm Up Cycle	10 minutes @ 25% of maximum speed
	10 minutes @ 50% of maximum speed
	10 minutes @ 75% of maximum speed

SPINDLE DUTY RATING – Follow the duty rating outlined below for ***6K, 8.5K & 10K RPM Spindles***

- If it is required for the spindle to run continuously (24 hours a day), the spindle must not run above 80% of the maximum RPM.
- If it is required for the spindle to run at maximum RPM, the spindle must not run more than 2 hours straight. After 2 hours of run time at maximum RPM, the spindle must be slowed down to 50% of the maximum RPM for at least 30 minutes before running at the maximum RPM again.
- ***For 12K, 15K & 21K RPM Spindles run at 100% Duty Cycle.***

3.26 Coolant Systems

Flood Coolant - Standard

The standard flood coolant system consists of a submersible flood pump mounted on the coolant tank, generally at the rear of the machine. The flood line runs up the back of the column and through the Z-axis cable track. It splits at a y-fitting in the headstock where it runs to two separate lengths of loc-line. It flows a maximum of 9 GPM.

Coolant Thru Spindle Systems (optional)

- Available for 40 or 50 taper spindles.
- The 350 PSI System has an adjustable range of 100 to 350 PSI. Features full pressure even with tool coolant holes up to .200" diameter.
- The 1,000 PSI System has an adjustable range of 300 to 1,000 PSI. Features full pressure even with tool coolant holes up to .100" diameter.
- Both systems includes high volume 8 gallon / minute pumps and a 10-micron replaceable filter cartridge.
- Machines with this option include a top cover on the machine.

High Pressure Washdown System & Washdown Hose (optional)

- Washdown system consists of one high volume submersible pump. For larger machines, may use two of these pumps.
- On the output of the pump is a T-fitting one line feeds the washdown hose and the other line feeds the washdown nozzles inside the enclosure.
- A ball valve is located between the line that feeds the hose and the line that feeds the nozzles so volume of flow can be adjusted when using both the nozzles and the hose at the same time.

Do not deadhead the pump by shutting off the pump's ability to discharge fluid. Components in the pump can heat to the point that they will severly damage the pump.

OPTIONAL AUTOMATIC TOOL SETTERS AND PART PROBE SYSTEMS
FRYER, RENISHAW and MARPOSS

Calibration for the Fryer Tool Probe & Part Probe are discribed below. For Renishaw and Marposs Systems, see the Manufacturers' Manuals.

3.27 Fryer Tool Setter (Tool Probe)

The Fryer Tool Probe can only be used to automatically measure tool length. It cannot be used to measure tool diameter or radius. Optional tool setting probes are available to perform length and diameter or radius measurements.

Tool Setter Calibration

If you ordered the tool probe during the original build of the machine it will have already been mounted to the machine table and tested at the factory. However, it must be calibrated before using it to set up your tool length offsets.

1. Install the tool probe in the reamed hole in the table and make sure that it is plugged in.
2. Set up a tool holder with a ½" dowel pin installed.
3. Use the **NEW TOOL** key to create the setup tool in the tool library as a ½" tool using the default name **CALIBRATION TOOL**.

10		CALIBRATION TOOL	1	1	0	-18.5250	0.5000			

4. Complete a tool change to this tool so that it will be active in the control.
5. Set a negative tool length offset for the **CALIBRATION TOOL** by measuring the distance from the tip of the dowel (while Z is at machine zero) to the top of the table surface.
6. Make sure your active work offset is zero in the Z-Axis.
7. Use paper, shim stock, or a gauge block to touch the dowel to the table.
8. Press **MEASURE TOOL** key
9. Press **LENGTH MANUALLY** key
10. Select **WORKPIECE**
11. Type the thickness of the paper, shim, or gauge block into Z0
12. Press **SET LENGTH** key

Now position the dowel approximately 1/4" above the probe in Z and roughly over the center of the probe

1. Select **MEASURE TOOL**
2. Select **CALIBRATE PROBE**
3. Select **LENGTH ONLY**
4. Press **CYCLE START**
5. The tool will move down in the Z axis and touch the top of the probe.
6. Once finished the tool will move back up.
7. Select **BACK** twice to exit the calibration screen and go to the **MANUAL** screen.

Calibration is now complete.

3.28 Fryer Part Probe

The Fryer Part Probe can only be used to automatically measure X and Y axis positions. It cannot be used to measure in the Z axis. Optional part probes are available to perform 3-axis measurements.

If you ordered the part probe during the original build of the machine it is located in the tool library where manual tools are stored. However, it must be calibrated before using it to set up your work offsets.

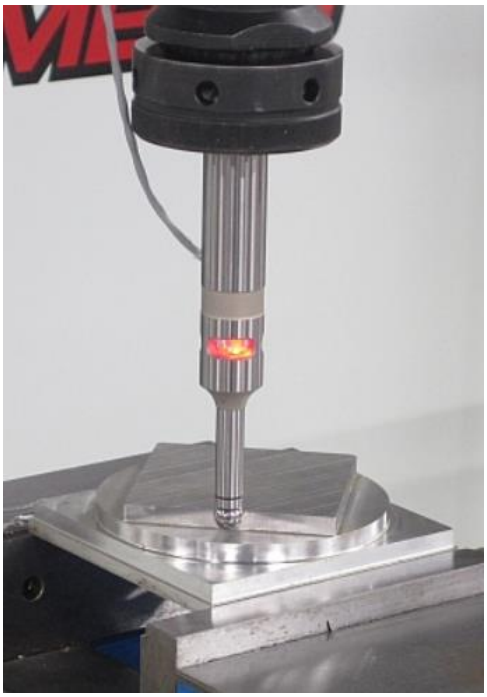

Fryer Part Probe Calibration

1. To set up a new FRYER probe in the tool table. it needs to be in the manual tool location in the library. It is important to remember your probe is wired which is manually inserted and removed the tool from the spindle.
2. Define the tool as a **3D probe**. When adding the new tool, you will need to press the **other** button to access the **3D** tool option. It is important that you fill out the correct tool diameter.

3. Load the probe into the spindle. Make sure the control recognizes the probe.
4. A ring gage is required for this next step. (A 2" diameter gage is recommended).
5. If a different diameter is required, change parameter **MD51770** to change diameter dimension. Refer to Section 4.1 for directions to access parameter screens.
6. Mount the gage to the machine table and use an indicator to find the center of the gage.
7. Once in the center, set a work offset in the middle. Make sure the offset is called up in the control.
8. Position the part probe at X and Y zero (middle of the gage). The Z axis should be roughly ¼" below the top of the ring gage.
9. Select **WORKP. ZERO**
10. Select **CALIBRATE PROBE**
11. Select **DIAMETER.** The diameter value must equal the diameter of your gage.
12. Press **CYCLE START**. Once complete the probe should be calibrated in the X and Y axis.
13. At this point the part probe is calibrated and ready for use.
14. Remove the ring gage and store it in a safe place.

3.3 BASIC MACHINE PROCEDURES

3.31 Setting Axes Home Positions

PROCEDURE TO BE PERFORMED BY QUALIFIED PERSONNEL ONLY

The 828 control comes standard with absolute encoders which generally do not require homing. However, if you have an issue with the battery or the machine is not turned on for an extended length of time the machine may need to be re-homed according to the following procedure. In addition, if an axis motor is removed or there is an issue with a motor coupling or pulley / belt assembly, one or more axes may need to be re-homed.

- Refer to Section 4.1 for directions to access parameter screens.

1. Press **MENU SELECT**
2. Select **SETUP**
3. Select **MACHINE DATA**
4. Select **AXIS MD**
5. Select **SEARCH**
6. Enter **34210 [0]** in the search field (This will read **ENC_REFP_STATE**)
7. Select **OK**
8. Select the proper axis with the **AXIS + AND AXIS –**
9. Change the parameter **34210 [0] to 0** for an axis with a motor encoder
10. Change the parameters **34210 [0]** and **34210 [1] to 0** for an axis with a scale
11. Press **INPUT**
12. Cycle power to machine leaving it off for a minimum of 30 seconds
13. **Take extreme caution now as the machine can be crashed!**
14. Line up the home markers for all axes that need to be homed
15. Press the **E-STOP** button to turn off the servos
16. Press **MENU SELECT**
17. Select **SETUP**
18. Select **MACHINE DATA**
19. Select **AXIS MD**
20. Select **SEARCH**
21. Enter **34210 [0]** in the search field (This will read **ENC_REFP_STATE**)
22. Select **OK**
23. Select the proper axis with the **AXIS + AND AXIS –**
24. Make sure Parameter **34210 [0] and 34210 [1]** (if axis has a scale) **are set to 0**. If it is not, it is probable that the wrong axis is selected.
25. Change the parameter **34210 [0] to 1** for an axis with a motor encoder
26. Change the parameters **34210 [0]** and **34210 [1] to 1** for an axis with a scale
27. Press **INPUT**
28. Turn the feed rate override all the way down
29. Pull the **E-Stop** button out
30. Select **RESET**
31. Press **HOME RETURN (**should say Jog Ref at the top of the screen)
32. For a mill, press **AXIS+ (refers to the hard key on the manual panel you have selected)**

33. When done make sure parameter **34210 [0] shows 2** for all axes (axis with motor encoder)

34. When done make sure parameter **34210 [0]** and parameter **34210 [1] shows 2** for all axes (axis with scale)

3.32 Check Axis Backlash

Tools Required: 0.0001" resolution dial indicator, remote handwheel (manual pulse generator)

- Set the indicator along the axis which is being measured. The needle should be in contact with a flat machined surface and the base on a stable, fixed point. See the pictures below which illustrate the setup for the X, Y, and Z axes.
- Using the remote handwheel, move the axis in one direction either positive or negative until the indicator is loaded by 0.002".
- Zero the indicator.
- Move the axis in the same direction by 0.005".
- Reverse the direction of the axis by 0.005".
- The additional amount that is needed to reach zero after the 0.005" reverse in direction is the backlash measured.
- This shows the loss of motion in the axis from the ballscrew and linear guide rails. Backlash compensation can be adjusted according to the procedure outlined below in *Section 3.33.*

X-Axis

Y-Axis

Z-Axis

3.33 Adjusting Backlash Compensation

PROCEDURE TO BE PERFORMED BY QUALIFIED PERSONNEL ONLY

- Refer to Section 4.1 for directions to access parameter screens.
  - Press **MENU SELECT**
  - Select **SETUP**
  - Select **MACHINE DATA**
  - Select **AXIS MD**
  - Using **AXIS+ AND AXIS-,** select the correct axis
  - Select **SEARCH**
  - Enter **32450 [0] or 32450 [1]** if the machine is equipped with glass scales on the selected axis
  - Adjust the backlash on each axis
  - Select **SET MD ACTIVE (cf)**
  - Select **RESET (po) to** reboot the control

3.34 Working With Waycovers

- When working with steel waycovers, several precautions must be taken:
- Do not put excessive weight on the waycovers (50lbs. max.)
- Protective gloves should be worn while handling waycovers, as the metal edges can be sharp.
- Covers should be cleaned regularly to avoid any build-up of chips or debris. It is recommended that the underside of the covers be thoroughly cleaned at least every 6 months.

To remove the waycovers for service:

- Jog the axis being worked on so that the cover to be removed is in the fully compressed position.
- Next, remove the cap head screws attaching the cover to the moving axis and to the waycover standoff (if applicable).
- The waycover can now be removed by simply pulling it off the way surface.

To check waycovers for wear and/or damage:

- Make sure the covers slide open and closed freely and that there are no dents or visible damage that would impair free movement of the covers.
- Inspect the plastic sliders and rubber bumpers under the waycover to make sure they are in place and not damaged or worn.

To reinstall the waycovers on the machine:

- Slide the cover on the appropriate way surface making sure that it is clear of debris.
- Insert the cap head screws to the moving axis and the standoffs (if applicable) and **hand tighten only**.
- To properly align the waycover, jog the axis to the position where the waycover is in full extension, and then full compression.
- With the waycover fully compressed, all cap head screws can now be tightened.
- Run the axis back and forth slowing over full travel check for any visual signs of misalignment.
- Now rapid the axis back and forth over full travel again check for any signs of misalignment.

3.35 Check / Adjusting Ballscrew Endplay

* It is important to read and understand the procedure *3.34 Working with Waycovers*, before executing this procedure.

- Tools Required: 0.0001" resolution dial indicator, remote handwheel (manual pulse generator), metric allen key set, spanner wrench.
- Check Endplay: You will need to access the pulley end of the ballscrew for the axis being worked on. To do this, remove the left side waycover and the belt cover for the X-axis. Remove the front waycover and belt cover for the Y-axis. The top end of the z-axis ballscrew is accessible by just moving the head down. Place a dial indicator needle on the end of the ballscrew. Load and zero the indicator appropriately. Using the remote handwheel set to x100 for the appropriate axis, change axis direction back and forth and observe any axial motion shown on the indicator. Endplay should be no more than .0001". This can also be accomplished by jogging each axis using the manual panel buttons or manually by using an allen wrench on the end of the ballscrew.
- Adjusting Endplay: If ballscrew endplay is greater than 0.0001", it must be adjusted. To do so, loosen the 3 set screws on the ballscrew spanner nut adjacent to the motor coupling. Using a spanner wrench, tighten the nut. The ballscrew will have to be held stationary with an allen key on the opposite end. Tighten the set screws and recheck the endplay. Repeat the tightening procedure if necessary. Once the ballscrew endplay is .0001" or less, re-install any sheet metal or motor covers and re-install the waycover(s) as applicable.

3.36 Check Axis Motor Belts – MC-80/100 ONLY

- The axis motors are connected to the ballscrews via pulley driven belts. Belts should be checked for excessive wear and proper tension at least every 6 months.
- To access the belts, remove left side belt cover for the X-axis and the front belt cover for the Y-axis.
- The Z-axis belt is located on the top of the column
- Once you have gained access to the belts, inspect them for any visible signs or wear or damage. Once the belts are considered acceptable, check each belt for proper tension.
- Belt tension is adjusted by loosening the slotted motor plate and sliding the motor-plate assembly to tighten or loosen the belt as required. Double check all hardware is properly tightened once the belt tension is correct.
- After the inspection is complete and any adjustments made, re-install the belt covers.

4.0 828 CONTROL

4.1 ACCESSING MACHINE PARAMETERS

PROCEDURE TO BE PERFORMED BY QUALIFIED PERSONNEL ONLY

> ⚠ WARNING
>
> **Malfunctions of the machine as a result of incorrect or changed parameter settings**
>
> As a result of incorrect or changed parameterization, machines can malfunction, which in turn can lead to injuries or death.
>
> - Protect the parameterization (parameter assignments) against unauthorized access.
> - Handle possible malfunctions by taking suitable measures, e.g. emergency stop or emergency off.

1. Press **MENU SELECT**
2. Select **SETUP**
3. Select **MACHINE DATA**
4. Available folders: **GENERAL MD / CHANNEL MD / AXIS MD**

4.2 ACCESSING THE SOFTWARE VERSION

To find out the version of the software you are running on your 828 control:

1. Press **MENU SELECT**
2. Select **DIAGNOSIS**
3. Select **VERSION**
4. The Software Version number is on the first line and will read: ***"V##.## + SP ## + HF ##"***

4.3 REVERT TO THE FACTORY SET PASSWORD

PROCEDURE TO BE PERFORMED BY QUALIFIED PERSONNEL ONLY

1. Press **MENU SELECT**
2. Select **SETUP**
3. Select **SET PASSWORD**
4. Enter the password: **SUNRISE**
5. Press **OK**
6. The lower part of the screen should now read "Current Access Level: Manufacturer"

4.4 ADJUSTING INPUT VOLTAGE PARAMETERS

PROCEDURE TO BE PERFORMED BY QUALIFIED PERSONNEL ONLY

The Siemens control will shut itself off if the line voltage is more than 10% different than the voltage set in the control. You must adjust the parameter to match your line voltage to the machine.

The first step to accurately measure your line voltage. There are two ways to do this.

- Measure the incoming line voltage across all three legs with a voltmeter. Average your readings and write down the value.

  \- OR -

- Read the line voltage from the control, follow the following steps:
  - **MENU SELECT** key
  - **SETUP** key
  - **INFEED PARAMETER** key
  - Find **r25[0] =** and write down the voltage value in this parameter.

- Now you have the proper line voltage value to enter in the control.

  Follow the steps below:
  - Press E-stop
  - **MENU SELECT** key
  - **SETUP** key
  - Press Λ (up arrow hard key next to machine hard key)
  - **DRIVE SYSTEM** key
  - **SUPPLY** key
  - **POWER DATA** key See screen below:

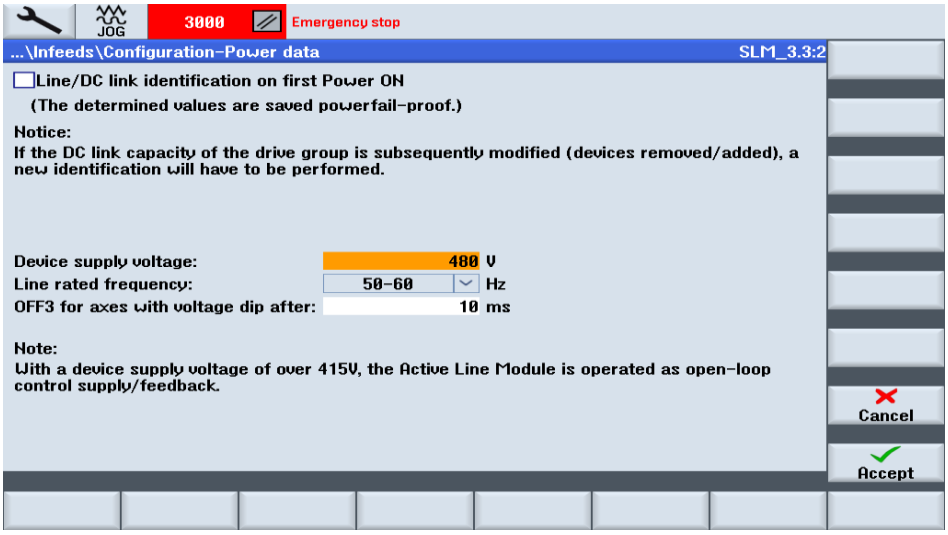

  - Scroll down to the **Device Supply Voltage** field like in the screen shot above. Enter the line voltage value you obtained in the previous steps, press enter
  - Press **ACCEPT** key
  - There will be a message that states, “Confirm You Want to Change the Parameter”, Press **YES** key to accept the change

4.5 M-CODES

An M code in CNC programming controls miscellaneous machine functions, including starting and stopping specific actions or programs.

M00 PROGRAM STOP
M01 OPTIONAL PROGRAM STOP
M02 END OF PROGRAM
M03 SPINDLE CLOCKWISE
M04 SPINDLE COUNTERCLOCKWISE
M05 SPINDLE STOP
M06 TOOL CHANGE REQUESTED
M07 MIST COOLANT OUTPUT (SPINDLE MAY HAVE TO BE ON)
M08 FLOOD COOLANT (SPINDLE MAY HAVE TO BE ON)
M09 COOLANT (FLOOD AND MIST) OFF
M10 INDEXER CYCLE START WAIT FOR COMPLETION
M11 MISC. MCODE M11=ON
M12 MISC. MCODE M12=OFF
M13 AXIS BRAKE ON
M17 HIGH PRESSURE THRU SPINDLE COOLANT ON
M18 HIGH PRESSURE THRU SPINDLE COOLANT OFF
M19 SPINDLE ORIENT
M20 CHIP AUGER ON
M21 CHIP AUGER REVERSE
M22 CHIP AUGER OFF
M23 PROG. AIR BLAST ON
M24 PROG. AIR BLAST OFF
M25 TURNS ON PART PROBE
M26 TURNS OFF PART PROBE
M30 END OF PROGRAM
M40 SHIFT GEARBOX INTO LOW RANGE
M41 SHIFT GEARBOX INTO HIGH RANGE
M52 ATC CAROUSEL IN (ARM ATC POT DOWN)
M53 ATC CAROUSEL OUT (ARM ATC POT UP)
M54 DRAWBAR ON
M55 DRAWBAR OFF
M58 ATC CAROUSEL CW 1 POSITION
M59 ATC CAROUSEL CCW 1 POSITION
M61 HOME ATC CAROUSEL TO POCKET 1, ASSUMES “TOOL 0” IN SPINDLE
M62 ARM ATC GRAB TOOL (ON ELECTRIC ATC ALSO SWAPS TOOLS AND GOES UP)
M63 ARM ATC ARM ORIGIN
M64 PNEUMATIC ARM ATC ARM DOWN AND SWAP TOOLS
M65 PNEUMATIC ARM ATC ARM UP

Note: M-codes may change depending on options the machine is equipped with.

4.6 ALARMS

An alarm will be displayed once a fault occurs.

> ! ***Warning****: If you do not heed an alarm that is issued and do not resolve the cause of the alarm, it can present a hazard to the machine, the work piece, the saved settings, and in certain circumstances, may cause injury.*

4.61 Siemens Alarms

1. If a familiar alarm number / description appears carefully check the machine and resolve the cause of the alarm.
2. If you are unfamiliar with the alarm in question, proceed to the alarm list as follows:
    a. Press **MENU SELECT**
    b. Select **DIAGNOSTICS**
    c. Select **ALARM LIST**
3. *Once "**ALARM LIST**" has been selected, press **HELP** key and additional information will be provided on the control screen.

4.62 Fryer PLC Alarms and Descriptions

There are certain PLC alarms in the 700000 range which are not in the **HELP** screen. These are **FRYER** Machine specific alarms that are for optional equipment installed on the machine. The alarms are listed below:

700000	ATC CAROUSEL NOT REFERENCED: EXECUTE M61
700001	LOW WAY LUBE [I32.6]
700002	LOW AIR PRESSURE [I32.2]
700003	HOME REQUIRED! PRESS CYCLE START
700004	PROBE ERROR / SIGNAL LOSS
700005	GEAR CHANGE FAULT
700006	SPINDLE OUT OF GEAR
700008	CHILLER FAULT
700009	HYDRAULIC PRESSURE FAULT
700011	THRU SPINDLE COOLANT FAULT, CHECK COOLANT SUPPLY
700013	EMERGENCY STOP PRESSED DURING TOOL CHANGE
700014	COUNTER-BALANCE CYLINDER PRESSURE LOW!
700016	CAROUSEL CANNOT INDEX POT NOT RETRACTED
700024	M52-TOOL POT DOWN TIMED OUT
700025	M53-TOOL POT UP TIMED OUT
700026	M69 CAUSED SERVO OFF
700027	M62 TIMED OUT CHECK TC HEIGHT, ORIENT, THERMAL MCATC
700028	M63 TIMED OUT CHECK THERMAL MCATC
700029	M54 DRAWBAR ON TIMED OUT
700030	M55 DRAWBAR OFF TIMED OUT
700032	CONTOUR HANDWHEEL ACTIVE
700033	Z MOTION AND ATC ARM NOT AT HOME POSITION
700034	RESET SUPPRESSED UNTIL TOOL CHANGE COMPLETION
700035	HOME RETURN: DEPRESS CYCLE START
700037	REPLACE PROBE BATTERY
700038	TOOL SETTER ACTIVE
700039	PART PROBE ACTIVE
700040	WAY OILER PRESSURE FAULT
700041	DOOR IS OPEN ~ CLOSE DOOR; PRESS CYCLE START TO CONTINUE
700043	DRAWBAR FAILURE

4.63 Clearing an Alarm

1. Carefully check the machine according to the description given in the alarm. Clarification of the alarm codes can be found by using the **HELP** as described above.
2. Resolve the cause of the alarm.
3. Press **RESET**
4. Certain alarms will require a reboot of the control to clear.

4.7 WORKING WITH FILES

4.71 File Types

- **NC** archive contains the machine ***PARAMETERS***
- **PLC** archive contains the ***LADDER LOGIC*** for the machine functions
- **DRV** archive contains the ***AXIS DRIVE SETTINGS***

4.72 Back-Up An 828 Archive File to A USB Stick

For a download of the machine archive to a USB , press these three keys at the same time on the control:

CTRL + ALT + S

This will create a complete standard Easy Archive (**.ARD**) on a **USB**.

If a specific file or additional files need to be backed up to a **USB**, do the following:

PROCEDURE TO BE PERFORMED BY QUALIFIED PERSONNEL ONLY

1. Select the **MENU SELECT**.
2. Select the **STARTUP**.
3. Press the **SYSTEM DATA** key. The data tree will open.

i. In the data tree, select the required files from which you want to generate an archive.

4. Press the **ARCHIVE** and **GENERATE ARCHIVE** keys.
5. The **GENERATE ARCHIVE: SELECT STORAGE LOCATION** window opens. Select the **USB** location for archiving.
6. Save the file as serial number of machine and the file name (i.e., for drive archive: “25123DRV”)
7. Enter a name and press the **OK** key. The directory is created below the selected folder.
8. Press the **OK** key.
9. Select the format archive **ARD** for 828, enter the desired name and press the **OK** key to archive the file/files.

a. A message informs you if archiving was successful.

10. Press the **OK** key to confirm.
11. An archive file in the .**ARD** (828) format type is created in the selected directory.

*Note: When backing up an entire machine you should generate an individual file for NC, PLC, Drive, and HMI. When that step is completed, you should generate an archive for all these together.

4.73 Reloading an Archive File

PROCEDURE TO BE PERFORMED BY QUALIFIED PERSONNEL ONLY

***NOTE**:* Set the password protection to “Current Access Level: Manufacturer”. Refer to Section 4.3 above.

1. Select the **PROGRAM MANAGER** key.
2. Press the **ARCHIVE** and **READ IN ARCHIVE** keys.

3. Select the archive storage location (i.e., **USB**) and position the cursor on the required archive.
4. Note: When the option is not set, the folder for user archives is only displayed if the folder contains at least one archive.

OR

5. Press the **SEARCH** key and in the search dialog, enter the name of the archive file with file extension **ARD** if you wish to search for a specific archive and press the **OK** key.
6. Press the **OK** or **OVERWRITE ALL** key to overwrite existing files.

OR

7. Press the **DO NOT OVERWRITE** key if you do not want to overwrite already existing files.

OR

8. Press the **SKIP** key if the read-in operation is to be continued with the next file.
9. The **READ IN ARCHIVE** window opens and a progress message box appears for the read-in process.
10. You will then obtain a **READ ERROR LOG FOR ARCHIVE** in which the skipped or overwritten files are listed.
11. Press the **CANCEL** key to cancel the read-in process.

*Note: You may only archive one file at a time.

4.74 Backing Up Tool Data on the 828 Control

Note: Setup data from part programs can only be backed up if they have been saved in the **WORKPIECES** directory.

For part programs, which are located in the **PART PROGRAMS** directory, **SAVE SETUP DATA** is not listed.

1. Select the **PROGRAM MANAGER** operating area.
2. Position the cursor on the program whose tool and zero-point data you wish to back up.
3. Press the **>>** and **ARCHIVE** keys.
4. Press the **SETUP DATA** key.
5. The **BACKUP SETUP DATA** window opens. Select the data you want to back up.
6. Change the specified name of the originally selected program in the **FILE NAME** field, if needed.
7. Press the **OK** key.
8. The setup data will be set up in the same directory in which the selected program is stored as an INI file.

4.8 ADDING A SOFTWARE OPTION ON THE 828 CONTROL

When you receive your machine all license numbers applicable to your order are activated prior to the machine leaving the factory. If you purchase a control option after the machine arrives at your facility you will receive a license number to active on your control. The license will either require you to go online and create a new license key, or this will be already done for you. If you receive a license certificate like pictured in figure one go to step 1, if not and you already have a license (see figure 2) then proceed to step 8 .

1. You need to obtain the hardware serial # (this not the same as the control serial number) follow these steps:
   - Press **MENU SELECT**
   - Press **SETUP**
   - Select **LICENSE** (you may have to press the ^ or > key to see the soft key)
   - Record the **CF CARD SERIAL #**

   This number can also be found in the CF card located in your electrical cabinet. The number on the card is labeled as CFC SN. **CAUTION**: Machine must be powered down before the card is removed.
2. Once you have obtained your Control Hardware Serial Number you are ready to activate your new license number. Using the internet, log onto: www.Siemens.com/Automation/License
   - Click on the link for **DIRECT ACCESS**
   - Enter the **LICENSE # AND DISPATCH NOTE #** from the paperwork into the areas indicated on the web page.

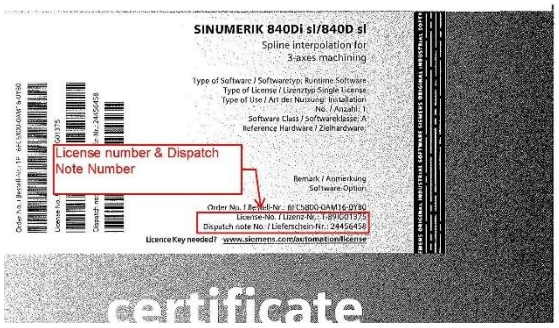

3. Click **NEXT**
4. On the next screen enter your hardware serial number.
5. Next select the control model. Your machine has a 828.
6. The system will now return a software license key
7. Download PDF and save for your records. Also print the PDF so you can refer to it at the machine to type in new license key.
8. Already have printed license see below:

9. Follow step 1 to get to the license screen. Type in (overwriting old license key) current license key and press input. The field is highlighted, make sure to enter correctly.

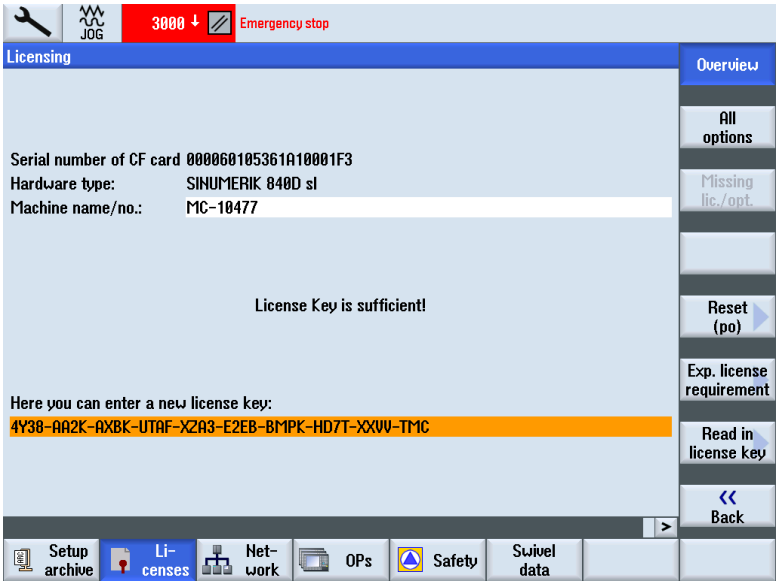

Figure 3

10. Press all options soft key
11. Search for the particular option you want to activate. Set the box with the select key. See figure 4.

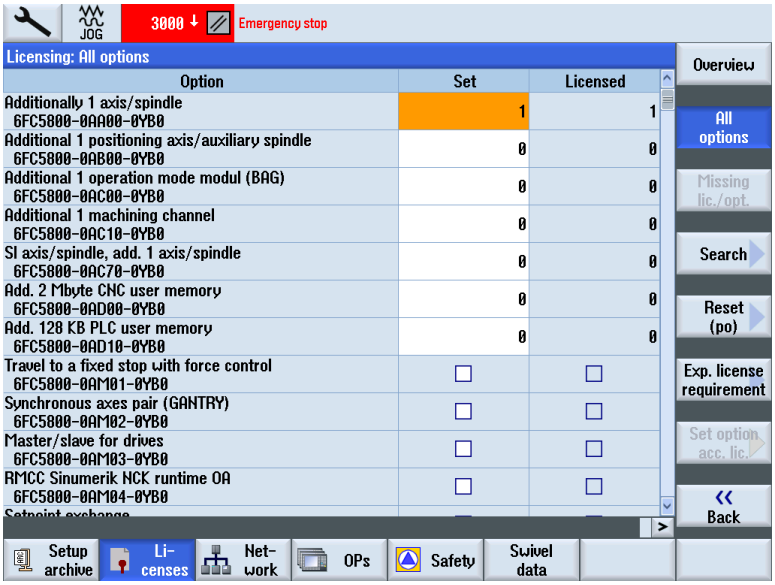

Figure 4

12. Press back soft key and power machine down. When you turn the machine back on the option should be activated.

4.9 SET UP THE NETWORK DRIVE IN THE 828

> **! NOTE:** *It is recommended that this procedure be performed by an experienced network administrator.*

The transfer of programs can be achieved by mapping a soft- key to a networked computer. The soft key will appear in the Program Manager screen of the controller.

The computer connected to the network must be configured with a unique username and password. This information will be required for inputting on the controller. A dedicated shared folder is required on the PC for the storage of files.

- Refer to Section 4.1 for directions to access parameter screens.

1. Press **MENU SELECT**
2. Select **SETUP**
3. Select **START-UP**

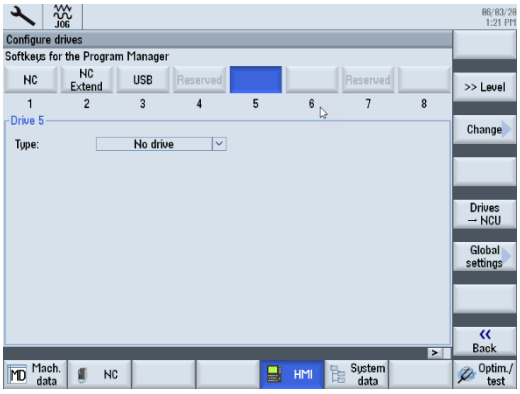

4. Press the **HMI** and **LOG. DRIVE** keys. The **SET UP DRIVES** window opens.
5. Select the open key that you want to configure (**example #5**).
6. To allow entry fields to be edited, press the **CHANGE** key.
7. Select the data for the corresponding drive or enter the necessary data.

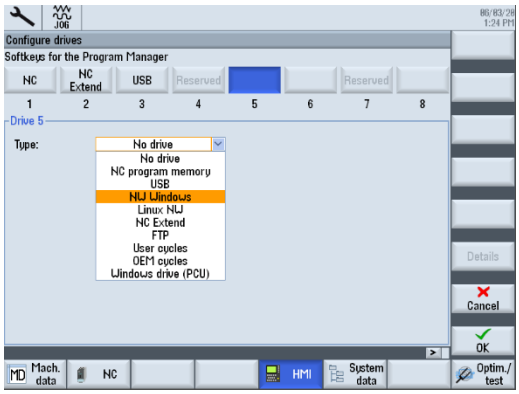

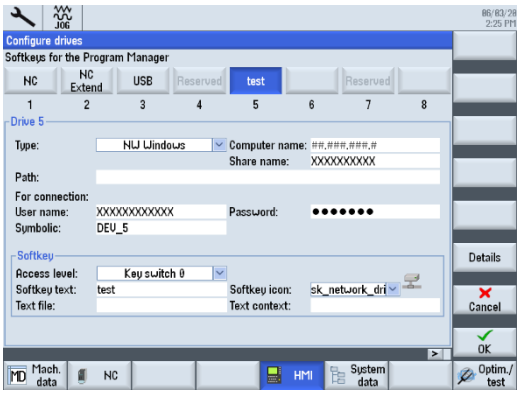

8. Press the **OK** key. The entries are checked. A window with the appropriate message opens if the data is incomplete or incorrect. Acknowledge the message with **OK** key. If you press the **CANCEL** key, then all of the data that has not been activated is rejected.
9. Restart the control in order to activate the configuration and to obtain the keys in the **PROGRAM MANAGER** screen.

5.0 - ARM STYLE ATC OPERATION & MAINTENANCE

5.1 ELECTRIC ARM TYPE ATC OPERATION

5.11 Safety Rules -- READ BEFORE OPERATING ATC

CAUTION! Always follow all Lock Out Tag Out procedures before performing any maintenance

- Due to the complexity and timing of the ATC, it should only be operated with the **M6** command.
- ***Never interrupt the tool changer in the middle of cycle, wait for it to complete the tool change***.
- The carousel motor is a 3-phase motor and must be phased correctly for proper direction. The machine is phased properly at the factory before shipment, so if the carousel rotates in the wrong direction, switch any two incoming power wires at the disconnect. ***Make sure the main power breaker is off!***
- **M58** moves carousel position CW one position, **M59** moves carousel position CCW one position.
- If the T code is programmed on the same line as the M6 command, make sure the M6 is before the T code (example: M6T4).

5.12 Manual Operation of the Tool Changer

PROCEDURE TO BE PERFORMED BY QUALIFIED PERSONNEL ONLY

The following is the process to manually step through the tool change operation in MDI.

NOTE*: Make sure you follow these steps in sequence to prevent damage to the ATC or machine.*

The proper sequence of a tool change and the respective M-codes are as follows:

1. T-code executes to move carousel to pending tool
2. **M52** tool pot down
3. **M19** orient spindle.
4. **G75 FP=1 ZO**, moves z axis to tool change position.

   (Tool change position is stored in **Axis MD Z1** parameter **30600 - FIX_POINT_POS[0]**)
5. **M62** Arm moves under spindle to grab tool and carousel pot
6. **M54** Drawbar open to unclamp tool
7. **M62** Arm removes tool from spindle and carousel tool pot and swaps them
8. **M55** Drawbar off to clamp tool in spindle.
9. **M63** Arm to origin position.
10. **M53** Carousel tool pot up.

5.13 Setting Tool Change Height

PROCEDURE TO BE PERFORMED BY QUALIFIED PERSONNEL ONLY

The proper tool change height must be set for the ATC to perform correctly. The tool change height (machine coordinates from home position) is stored in parameter **30600**:

Axis MD Z1 parameter **30600 - FIX_POINT_POS [0]**

! This must be checked if the home position is different due to the removal of the axis motor, home switch or dog.

Refer to Section 4.1 for directions to access parameter screens.

There is some allowance **(play)** allowed for the tool change height (about .03"). This is the difference between the V- flange groove of the tool and the V location of the arm. You will see this vertical play if you install a tool into the arm when the machine is in **E-Stop**. **Make sure you do not leave the tool there!**

1. Home the machine.
2. Manually move the axis to the tool change height specified in parameter **30600** or use **G75 FP=1 Z0** and the machine will position to the tool change location.
3. Orient the spindle with an **M19** command.
4. Install a tool in the spindle.
5. Command **M81** to set TC service mode. Allows axis movement when arm is not at origin.
6. Command **M52** for tool pot down
7. Command **M62** to move arm and grab tool.
8. Using the handwheel at its finest setting jog .001" increments to move the Z axis so the V-flange groove of the tool is in the center of the arm's V-notch. Be careful not to put stress on the ATC arm. **(This is "play" as described above.)**
9. When the correct **Z** axis tool change position is found, record the machine coordinate value, and retain for entry into parameter **30600** for the appropriate axis.
10. Command **M54** to release drawbar.
11. Command **M62** to exchange tools.
12. Command **M55** for drawbar off.
13. Command **M63** to move arm to origin position.
14. Command **M53** for tool pot up.
15. Command **M82** to disable TC service mode.
16. Update parameter **30600 FIX_POINT_POS [0]** with the new tool change height for **Z**.

5.14 Recovering from a Tool Change Failure

PROCEDURE TO BE PERFORMED BY QUALIFIED PERSONNEL ONLY

- If a tool change fails, record all of the alarm messages that are displayed on the alarm screen. Make sure the number is written down.
- The tool change recovery button will be flashing. Press E-stop. Remove tools out of spindle, arm and carousel pot that is extended for tool change.
- Turn on drives. Press Rest Button. Momentarily press the tool change recovery button multiple times until arm is a rest location and carousel pot is retracted into carousel.
- Make sure you catch any tool still in the spindle as it will be ejected. Press reset when complete. Check tool table to install tools in correct location.
- Repair any problems that have caused the failure.

5.15 ATC HOME Position and Tool Bin# Reset

To reset all the tool bin locations, follow this procedure:

1. Remove the tool from the spindle
2. In **MDI** command: Type in **M6T0** and press **CYCLE START**
3. Remove all new tools from the spindle
4. Go to command **M61** to index the carousel to bin #1
5. Go to tool table and select the **MAGAZINE** function.
6. Select **UNLOAD ALL** to remove the tools from the table.
7. Now select **TOOL LIST**. At this point all the current tool definitions are still in the table. They moved to the bottom below the highest tool number in your carousel.
8. You can now begin loading each tool definition up to the appropriate number that matches the physical location of the tool in the carousel. Do this by selecting **LOAD** and selecting a location number.

5.16 Spindle Orient Adjustment

PROCEDURE TO BE PERFORMED BY QUALIFIED PERSONNEL ONLY

This procedure will outline how to adjust the spindle orient position when an **M19** is commanded to perform a tool change. Read all instructions carefully and do not skip steps.

1. In **MDI** clear out any previous commands and type in:
   G75 FP=0 Z0
   M19
2. Command **M62** to move arm under the spindle.
3. With **Z** axis at maximum positive limit and **ATC** arm under spindle nose, make sure the spindle can be spun without spindle keys hitting **ATC** arm.
4. Press **MENU SELECT**
5. Press **DIAGNOSTICS**
6. Press **AXIS DIAG**, (If you do not see key press "**>**" arrow key to see more buttons.
7. Press **SERVICE AXIS** Use **Axis +** or **Axis -** key to display **AX4:MSP1/3.3.3/SPINDLE** see screen below:

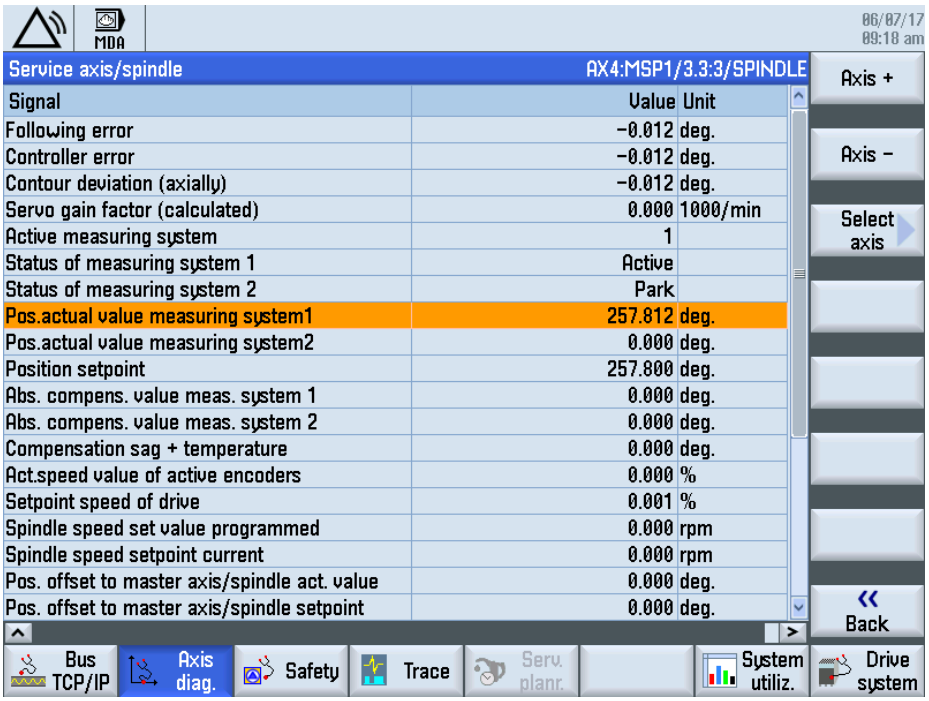

8. Press **RESET** and slowly turn the spindle until the spindle keys line up with the **ATC** carousel key.
9. Note what the degrees are reading on the highlighted line above and write it down. Compare it with the **Position Setpoint** below the highlighted line.
10. Press **MENU SELECT**
11. Press **SETUP**
12. Press **MACH DATA**
13. Press **AXIS SD** (you may have to press "**>**" to show additional buttons)
14. Use **Axis+** until spindle axis is displayed.
15. Scroll down to parameter **43240 $SA_M19_SPOS**, this is the current orient position. Add the value you obtained in step **10** and input into this field.
16. Command **M63** to move arm to origin position.
17. Press **RESET** and make sure the spindle orient goes to the correct position before doing a tool change.

5.17 Arm Alignment

PROCEDURE TO BE PERFORMED BY QUALIFIED PERSONNEL ONLY

If the arm no longer moves in the proper angular alignment an adjustment may be required. The arm is held in place on the arm shaft with a compression clamp. In order to adjust this, follow this procedure:

1. Install tool in spindle
2. Orient spindle with **M19**.
3. Install tool in carousel pot.
4. Move carousel pot down with **M52**.
5. Move **Z** axis to tool change height with **G75 FP=1 ZO**.
6. Move arm to grab tools with **M62**.
7. Loosen socket head cap screws at bottom center of arm and align arm to grab tools fully. Once completed retighten the cap screws.
8. Move arm back to origin location with **M63**.
9. Remove tools
10. Put carousel pot back up with **M53**.
11. Turn off orient with **RESET** button.

ELECTRIC ARM TYPE ATC – CONTROL ELEMENT POSITION EXPLANATION DRAWING

NO	CONTROL ELEMENT	FUNCTION	SPECIFICATION TYPE 40-24DV	DISK	QTY	REMARK
A	Gradient Structure Motor 1	Control tool disk position reverse turn	1/4HP*4P		1	3Ø220/60 HZ
B	Proximity Sensor 2	Tool change structure origin point number one tool signal	Balluff PSC40F-3V00-102		1	Ø12 DC24V(PNP)
C	Sensor Switch 3	Stop signal of disk gradient motor	Balluff PSC40F-3V00-102		1	Ø12 DC24V(PNP)
D	Reed Sensor 4	Positioning signal of tool dropping (contracting of cylinder)	LSD-B2		1	CC24V
E	Reed Sensor 5	Positioning signal of tool receeting (stretching of cylinder)	LSD-B2		1	CC24V
F	Tool Change Structure Motor 6	Tool change structure power source	3/4 HP*4P		1	3Ø220/60 HZ
G	Proximity Sensor 7	Stop signal of motor (tool change)	OMRON E2E-CR8B1		1	Ø4 DC24V(PNP NO)
H	Proximity Sensor 8	Tool clamp signal (tool change)	OMRON E2E-CR8B1		1	Ø4 DC24V(PNP NO)
I	Proximity Sensor 9	Origin point confirmation signal (tool change)	OMRON E2E-CR8B1		1	Ø4 DC24V(PNP NO)

ELECTRIC ARM TYPE ATC – SEQUENCE DIAGRAM OF ELECTRIC ACTION

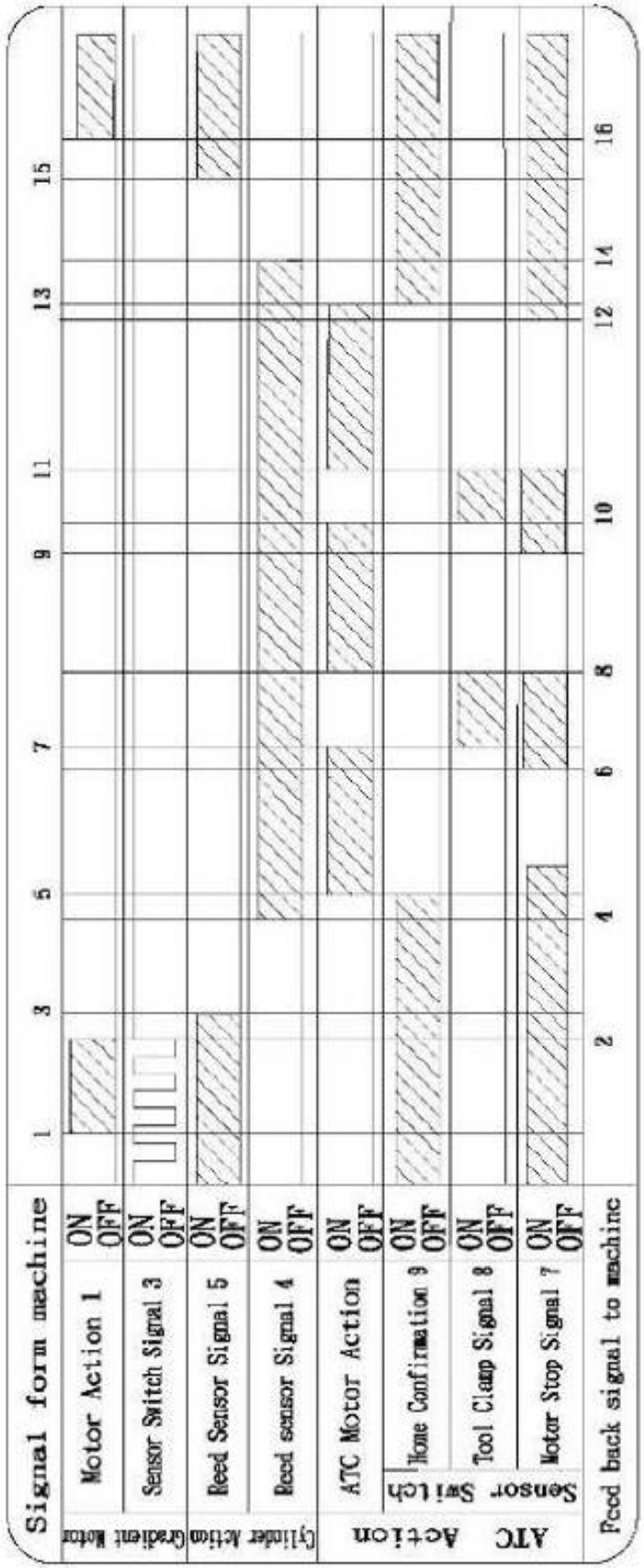

1	Tool selection (Tool selection power for CW or CCW)	9	ATC motor start to stop
2	Tool counter and positioning signal (to stop indexing motor)	10	Tool change confirmation, tool clamping signal, motor stop
3	Power on for tool pot up-down	11	Motor power on and arm to home position
4	Positioning signal of tool falling (contracting of cylinder)	12	ATC motor start to stop
5	Tool change motor start from home	13	Motor stop & home confirmation
6	ATC motor start to stop	14	Protruding of cylinder starts to position, tool pot home position
7	Tool clamping confirmation, tool release signal, motor stop	15	Protruding of cylinder positioning signal (Tool change finish)
8	Tool release finish, motor power on	16	Indexing motor rotating to new order - pot

Voltage DC24V(Please choose positive or negative output voltage by PNP or NPN)

Voltage 220V 60HZ DC24V

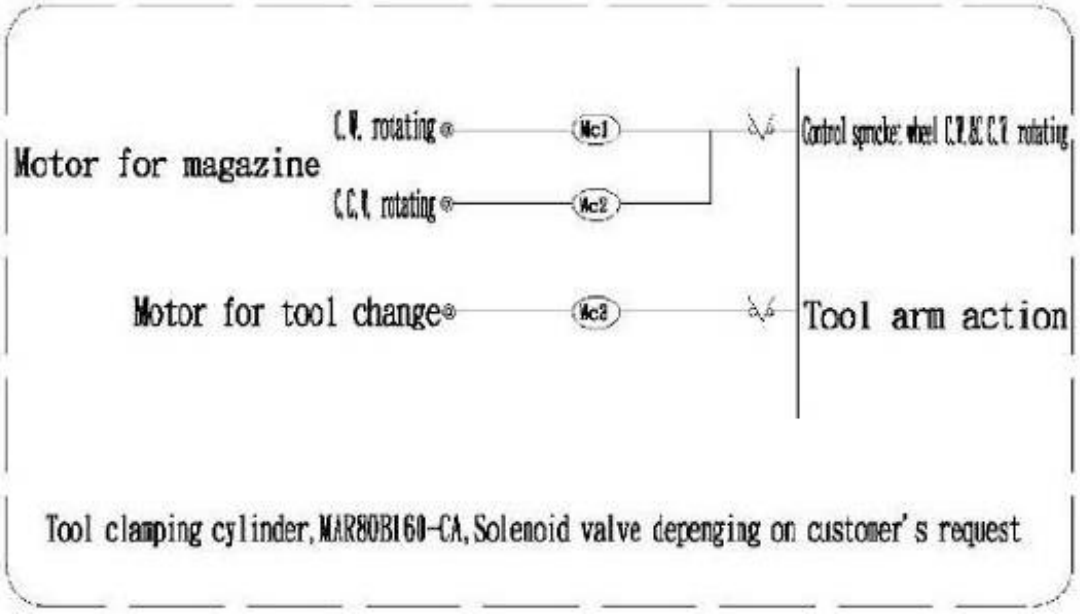

ELECTRIC ARM TYPE ATC – MOTOR & SWITCH WIRING DIAGRAM

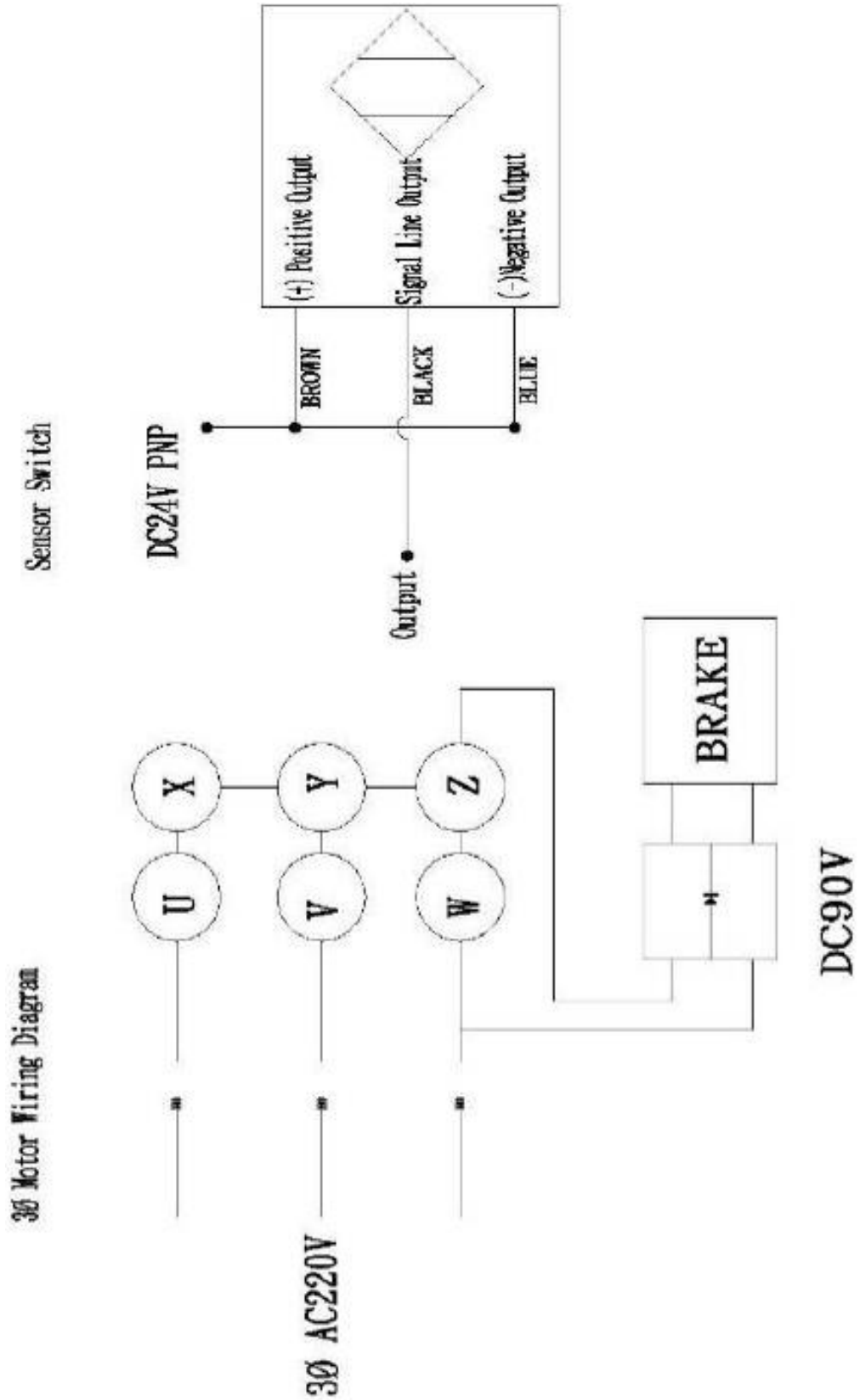

ELECTRIC ARM TYPE ATC – AIR PRESSURE SWITCH WIRING DIAGRAM

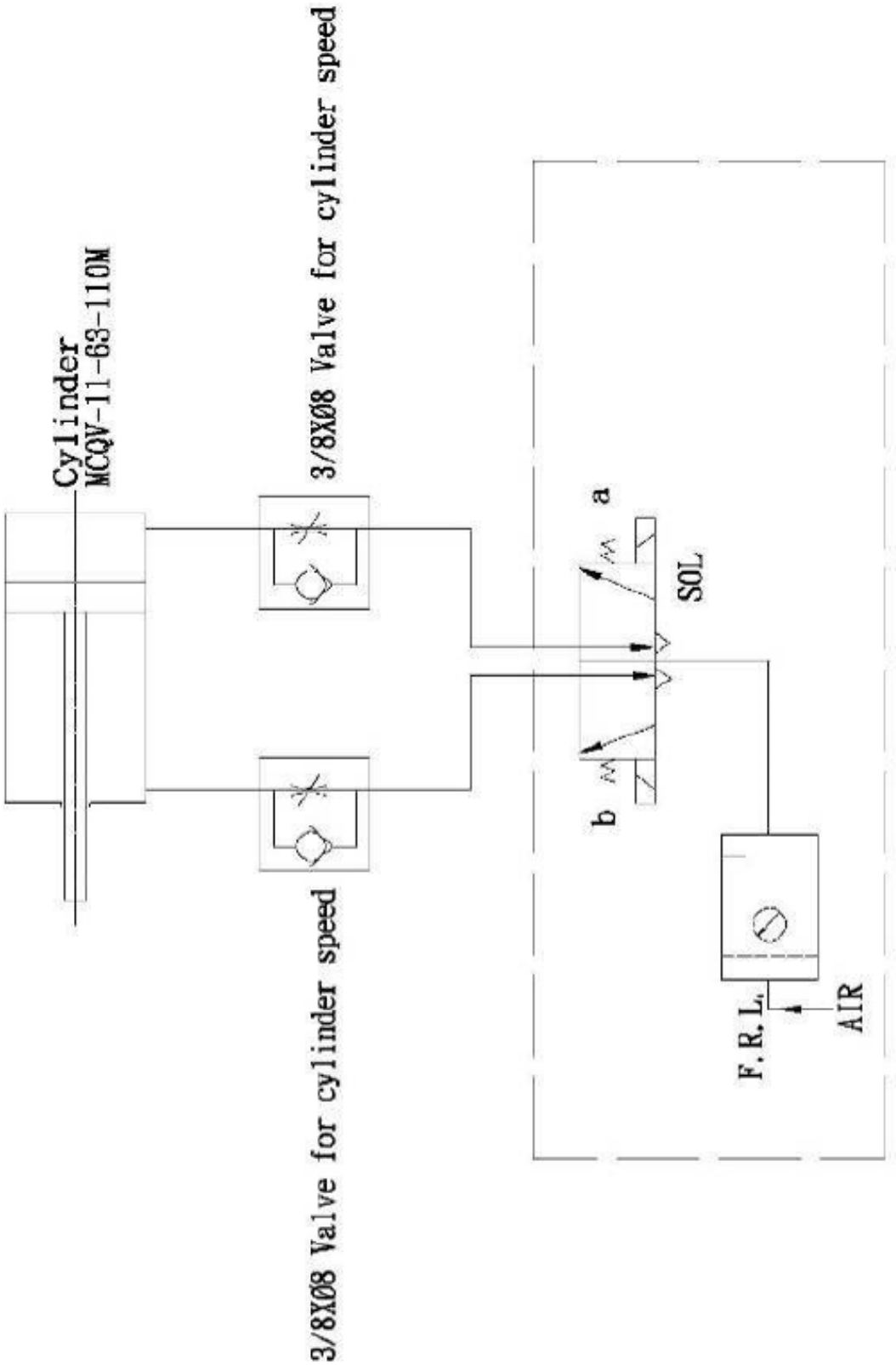

The solenoid valve shown within the dotted lines is shown for reference only and is not included as a standard accessory.

ELECTRIC ARM TYPE ATC – WIRE JUNCTION BOX DRAWING

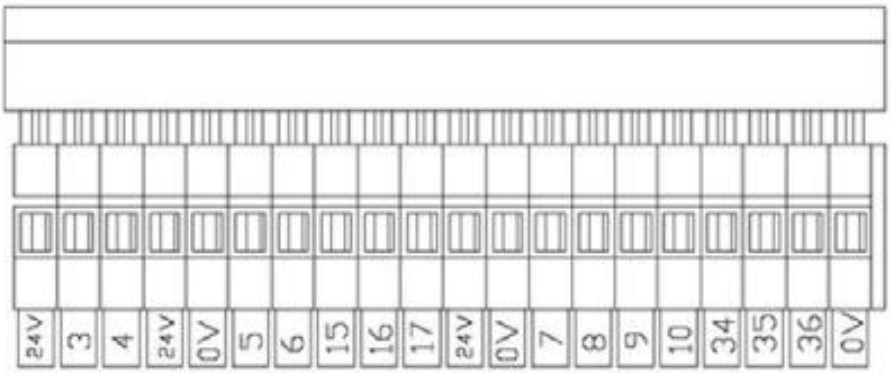

CONNECTOR WAGO231-620

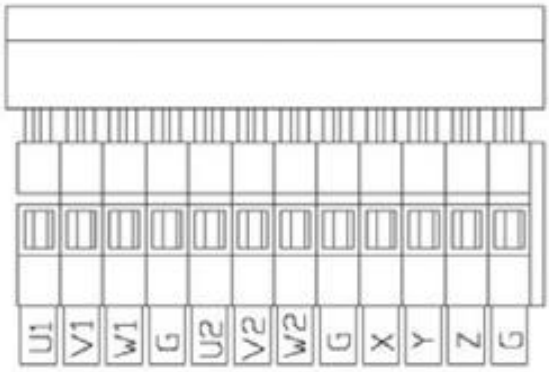

CONNECTOR WAGO231-612

ELECTRIC ARM TYPE ATC – WIRE BOX DRAWING

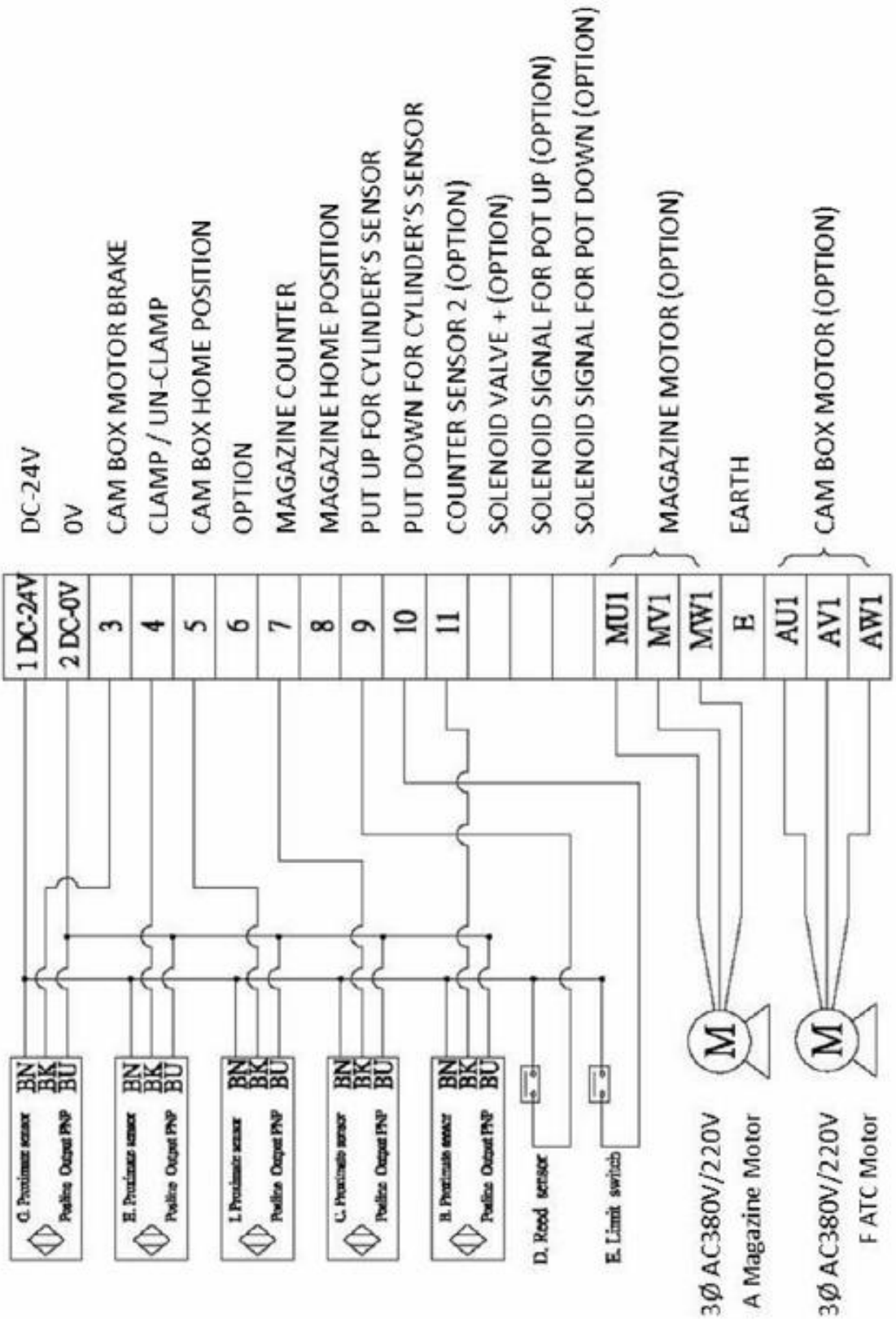

ELECTRIC ARM TYPE ATC – MAIN ASSEMBLY DIMENSIONAL DRAWING

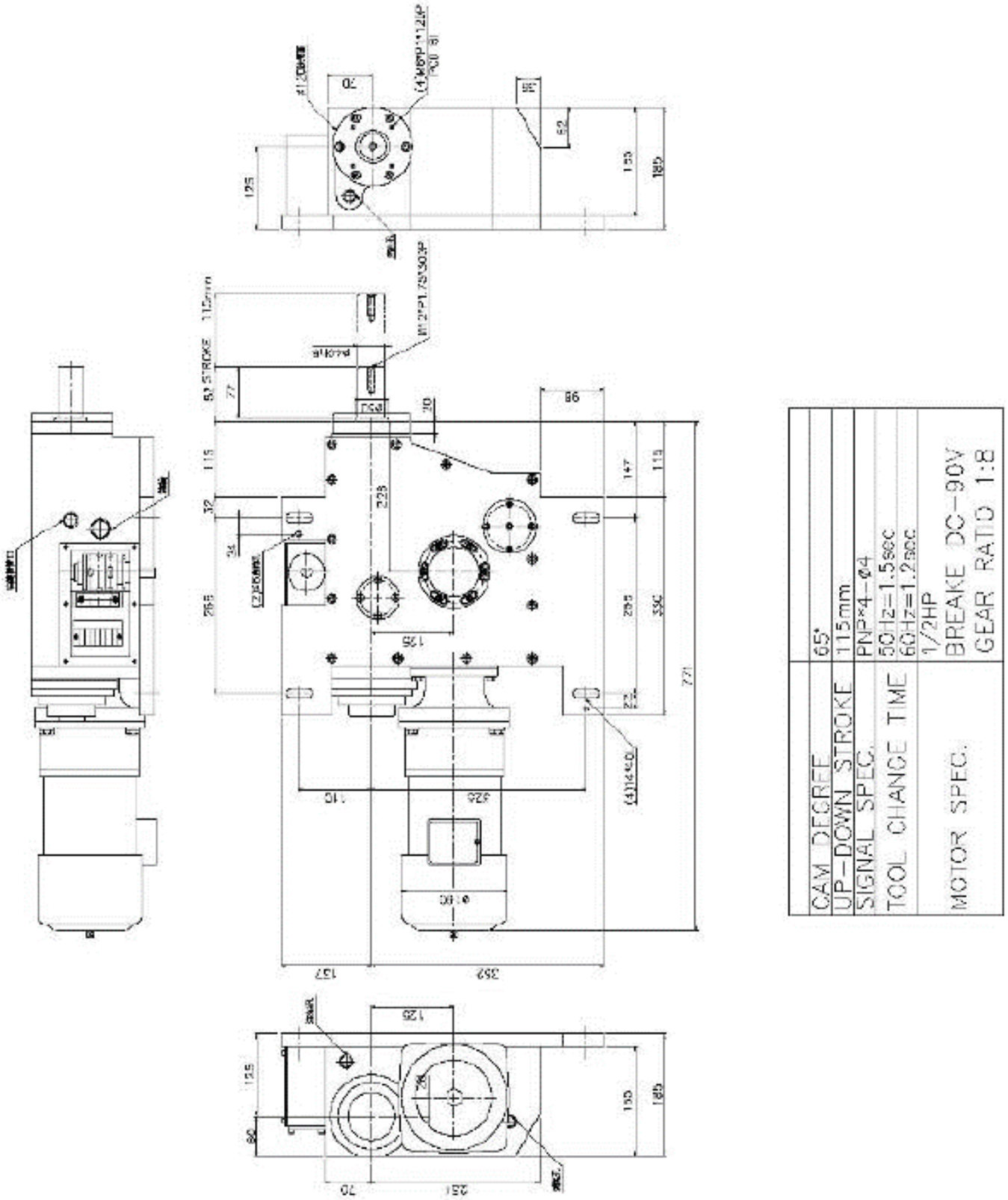

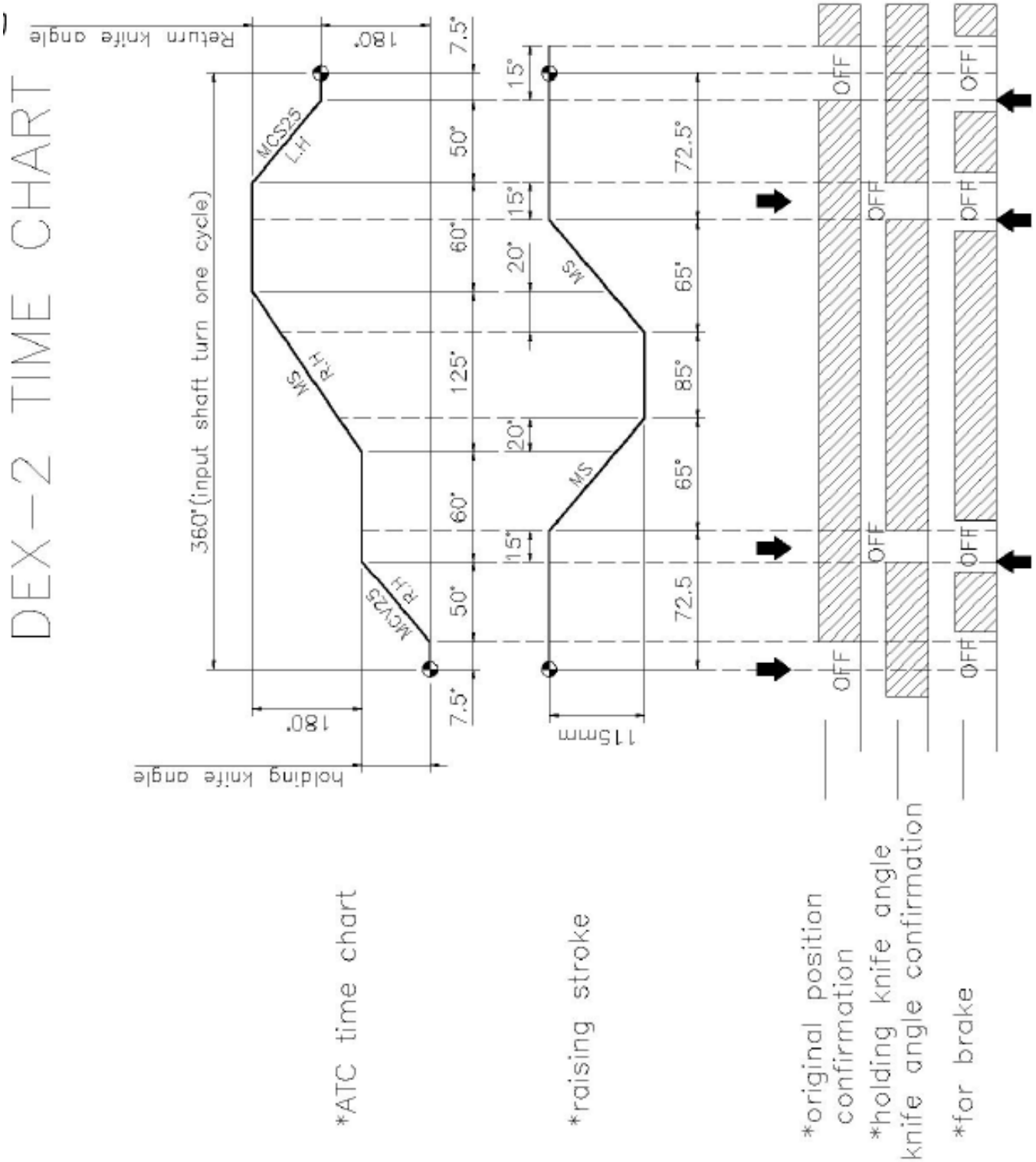
DEX-2 TIME CHART
Return knife angle
180°
360°(input shaft turn one cycle)
holding knife angle
180°
MCS25 L.H
MS R.H
MCV25 R.H
MS
7.5°
50°
60°
125°
60°
50°
7.5°
15°
15°
20°
20°
15°
72.5°
65°
85°
65°
72.5
115mm
OFF
OFF
OFF
OFF
OFF
OFF
OFF
OFF
*ATC time chart
*raising stroke
*original position confirmation
*holding knife angle
knife angle confirmation
*for brake

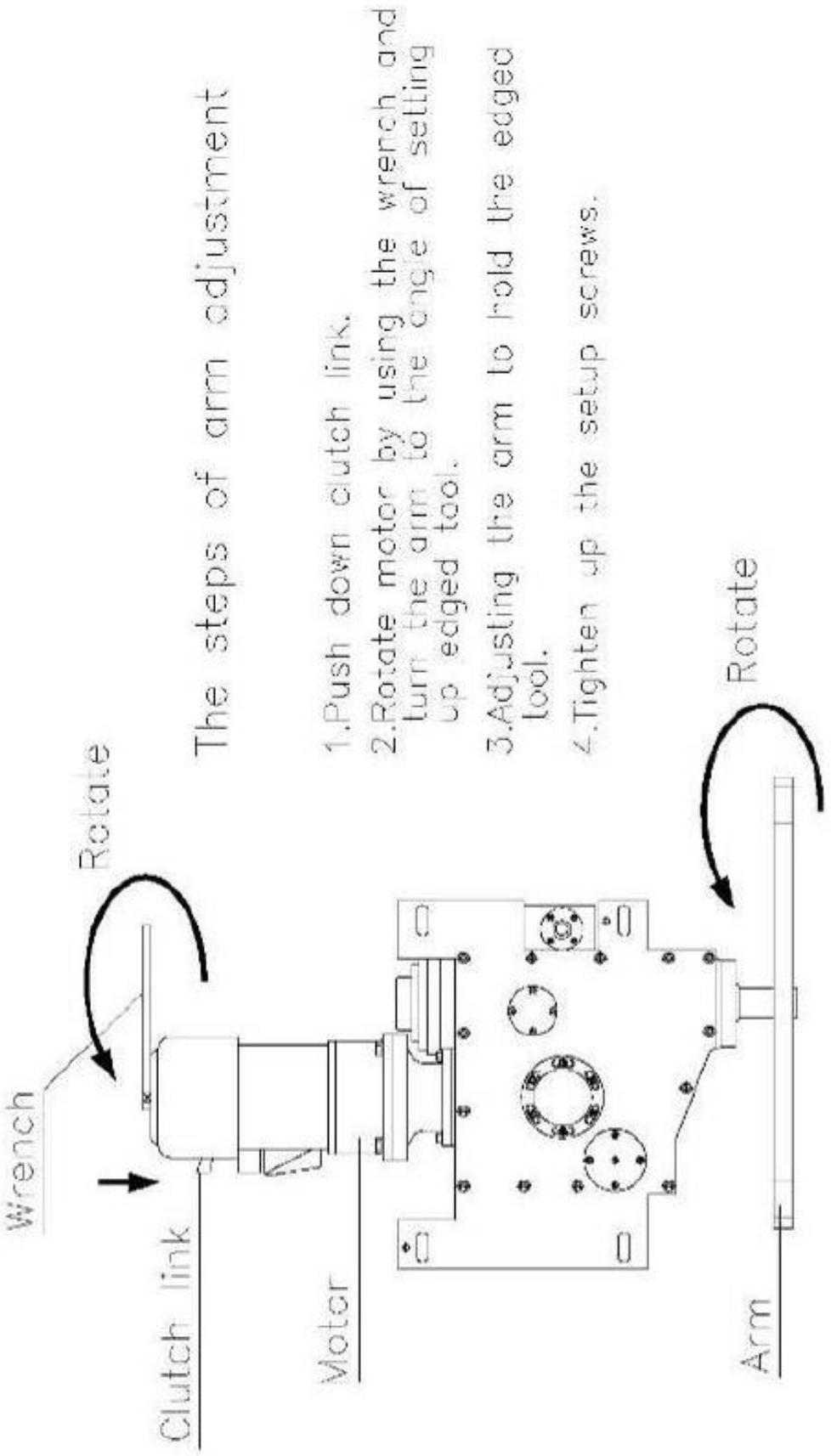
The steps of arm adjustment
1.Push down clutch link.
2.Rotate motor by using the wrench and turn the arm to the angle of setting up edged tool.
3.Adjusting the arm to hold the edged tool.
4.Tighten up the setup screws.
Rotate
Wrench
Clutch link
Motor
Rotate
Arm

ELECTRIC ARM TYPE ATC – POWER OUTPUT DIRECTION DIAGRAM

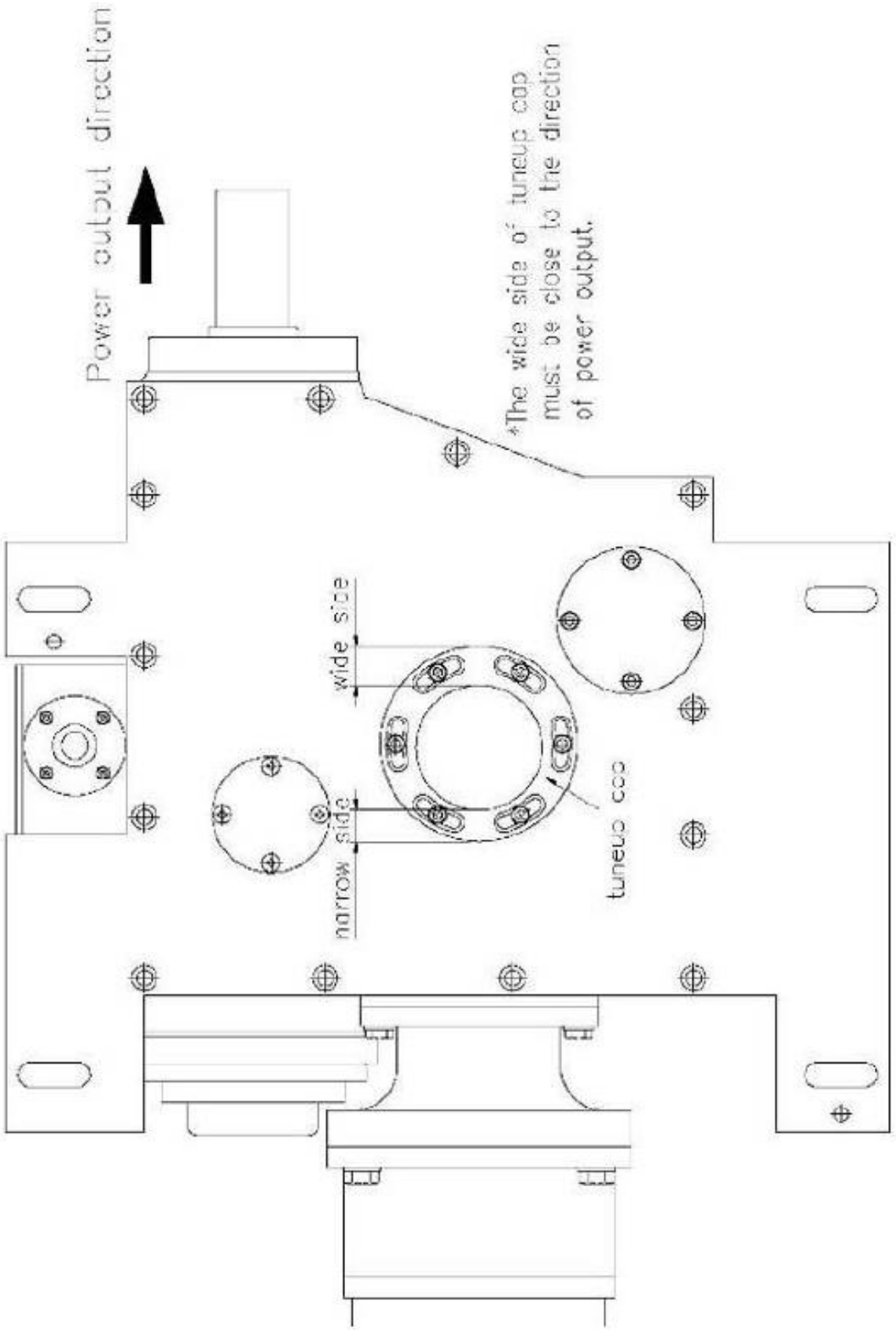

ELECTRIC ARM TYPE ATC – GEAR OIL SPECIFICATION

BRAND NAME	SPEC(VISCOSITY GAGE ISO VG)
SHELL	Omala EP 150-220
TOTAL	Garter EP 150-220
MOBLE	Mobil gear 150-220
ESSO	Spartan EP 150-220
CASTROL	ALPHA SP(EP) 150-220
CPC	***85W/90***

NOTES:

1. Check oil level before running equipment
2. Change oil after 2,400 hours of use
3. Use new oil with the proper viscosity

ELECTRIC ARM TYPE ATC – REPAIR PROCEDURES

1. To dismantle and reinstall the splined output shaft:
   - Turn to origin position, remove the taper pin (246) and M8 bolt (227) on the case cap.
   - Remove the case cap (101B).
   - Loosen hexagonal screw (225) and remove the front fix cap (111).
   - Remove the splined output shaft (106), and transmit wheel (107), suns nut (208) suns gasket (210) and remove the shaft.
   - Reassemble in reverse order.
2. To change the bearings on bearing tube: :
   - Turn to origin position, remove the case cap of taper pin (246) and M8 bolt (227) on the case cap.
   - Remove the case cap (101B).
   - Rotate the bearings tube (108) to the standby position.
   - Remove the side set screw (233).
   - Use the special tool to remove the bearings 4)20 (134), reinstall the new bearings, use the no air rubber to fastener the settled screw (233).
   - Reassemble in reverse order.
3. To take rocker apart: :
   - Turn to origin position, remove the case cap of taper pin (246) and M8 bolt (227).
   - Remove the case cap (101B)
   - Then remove the rocker of settled screw down (224)
   - Use the teardown tool, removed the rocker shaft (116)
   - Remove the thrust bearings AXK1108 (206), thrust bearing pad AS1108 (227) and needle bearings HK3516 (205).
   - The needle bearings 4)22(135) and needle bearings 4)24(136) taken apart the rocker is now replaced new product.
   - Reassemble in reverse order.

ATC TROUBLESHOOTING

Condition	Reason	Trouble Shooting
Tool disk stops in mid position.	1.Brake failed to work or was overloaded 2.Carousel count proximity switch too far from target.	1. Check that the electronic brake wiring is correct. If part failed to work 2. Move sensor switch closer to target
Tool disk rotates continuously.	1.Counting sensor switch failed. 2. Carousel count proximity switch too far from target.	1. Replace sensor switch 2. Move sensor switch closer to target.
Tool pot broken.	1. Tool disk rotated while tool pot down 2. Tool arm out of adjustment	1. Check operation of tool pot up/down proximity switches. 2. Adjust tool arm position.
Tool disk stuck.	Tool disk rotated while tool pot down	1. Check operation of tool pot up/down proximity switches.
Vibration during arm movement.	1.Oil level low. 2.Cylinder speed out of balance.	1. Fill lubricant oil. 2. Adjust cylinder pressure & speed with throttle valve.
Tool disk does not work during tool selection.	1. Induction switch does not work. 2. Reed switch broken. 3. Motor failure. 4. Electronic connection open. 5. Fuse opened.	1. Adjust reed switch to normal position. 2. Replace reed switch. 3. Repair/replace motor. 4. Check wiring & repair. 5. Check sensor switch. 6. Replace fuse.
Cylinder does not work during tool change.	1. Proximity switch for tool counter positioning broken. 2. Tool disk not in position. 3. Cylinder has no air. 4. ATC arm is not at origin position.	1. Replace proximity switch. 2. Check tool disk positioning. 3. Check air cylinder by manually operating solenoid valve. 4. Rotate motor manually to put ATC arm back to original position.
ATC motor over-heat	1. Break not working. 2. Motor short circuit.	1. Replace the brake. 2. Replace the motor.
ATC arm fails to move after tool is clamped. ATC fail to work after 180° degrees tool change. ATC home stop & home sensor switch do not work.	1. Proximity switch is in wrong position. 2. Proximity switch is broken.	1. Adjust proximity switch. 2. Replace proximity switch.
ATC arm stops out of position.	1. Proximity switch is in wrong position. 2. Positioning ring of proximity switch is at wrong angle	1. Adjust 3 switches at the same time to proper angle. 2. Rotate set ring, adjust 3 proximity switches to proper angle.
ATC tool arm not fully engaging tools.	ATC arm not aligned.	Loosen arm & align it.

51.8 TOOL POT REPLACEMENT PROCEDURE

1. Remove the 2 carousel covers as shown. 	2. Remove the 8mm bolt and loosen but do not remove the 10mm bolt on the shaft cover. (Note: do not remove the 4 attachment bolts) 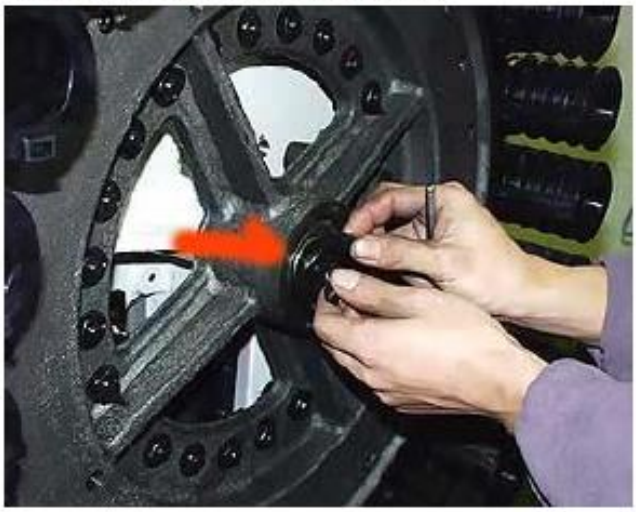
3. Pull out the plate to the M10 screw bolt position as shown. 	4. Remove the 6mm bolt next to the tool pot as shown.

51.8 TOOL POT REPLACEMENT PROCEDURE

5. Remove the broken pot by pushing the pot forward, rotating it upward, then extract it.

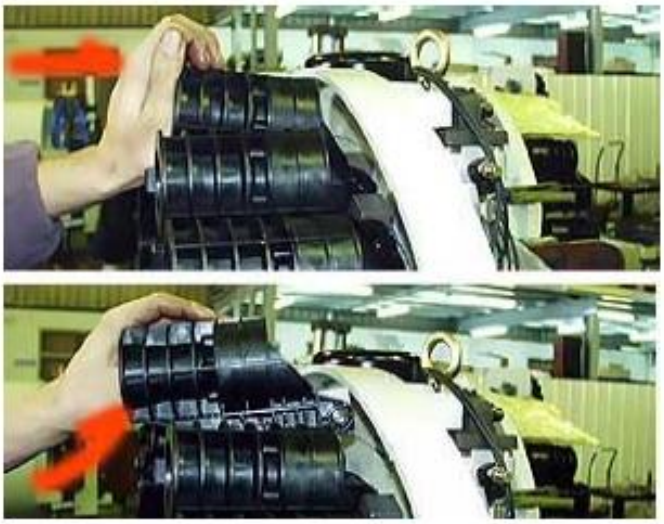

6. Confirm the attachment bolt and knob are correct by comparing to broken pot.

7. Install the new pot in reverse order of step 5.

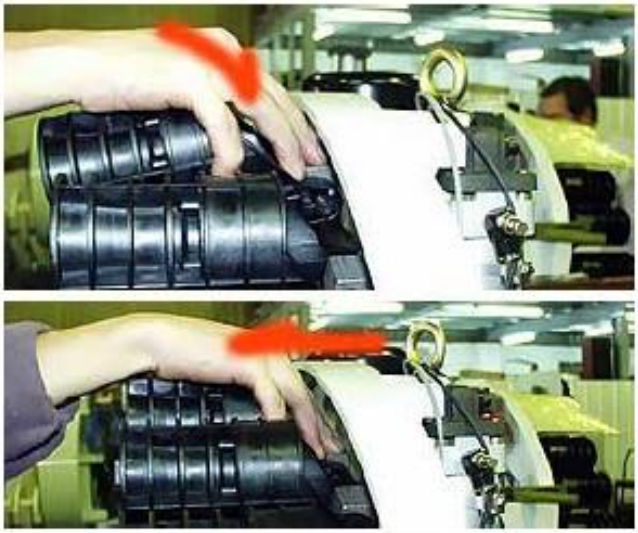

8. Replace the 6mm bolt next to the tool pot as shown.

51.8 TOOL POT REPLACEMENT PROCEDURE

9. Push the plate to the original position and replace/tighten the screws

10. Check that the tool disk is fully seated so it does not move in/out.

11 Check that the tool pot drops at the correct 90 degree angle by manually operating solenoid valve.

5.19 TO REPLACE ATC MAGAZINE MOTOR

1. Turn power off.
2. Disconnect the wires for the magazine motor in the junction box.
3. Remove the M8 bolts (4pcs) on motor seat, and then remove the motor.
4. Remove the S18 ring & M6 bolt from the damaged motor & install the parts on the new motor.
5. Please make sure the motor specification is correct before you replace it.
6. Reconnect the wires in the junction box.

5.20 REPLACE ARM MOTOR

1. Power off.
2. Disconnect the wires for the arm motor in the junction box.
3. Remove the M10 bolts (4pcs) on motor seat, and then the motor.
4. Please make sure the motor specification is correct before you replace it.
5. Reconnect the wires in the junction box.

5.21 CYLINDER REPLACEMENT

1. Turn off the power & cylinder air pressure source.
2. Take off 08 air pipe.
3. Take off induction switch & mark original position before removing it.
4. Remove the M8 bolt on the cylinder and the S12 ring on joint “I”.
5. Make sure to the cylinder specifications are correct before you install. Install the induction switch to the original position.

5.22 INDUCTION SWITCH REPLACEMENT

1. Power off.
2. Disconnect the wires for the induction switches in the junction box.
3. Please loosen the seat of reed switch & take it out.
4. Replace new part & take care of the sensor position, push it to upward & downward until to end of both sides.
5. Follow the steps to set up wires in electric box.

5.23 REPLACING THE PROXIMITY SWITCH FOR THE TOOL MAGAZINE

1. Power off.
2. Disconnect the wires for the induction switches in the junction box.
3. Remove the front cover & outer metal cover.
4. Remove the M12 bolt on the proximity switch.
5. Replace the switches & make sure the gap distance is 4 mm.
6. Reconnect the wires in the junction box.

5.24 REPLACING THE PROXIMITY SWITCH FOR THE ARM

1. Power off.
2. Disconnect the wires for the induction switches in the junction box.
3. Remove the acrylic cover plate.
4. Replace the switch & make sure the gap distance is 4 mm.
5. Reconnect the wires in the junction box.

5.25 NOTES

1. Be sure to use the proper tools during maintenance & repair.
2. Take care to match the part specifications before replacement. Specifications are listed in the parts list.
3. Make sure the gap for the proximity switch & reed switch 4 mm.
4. Be sure to note the wire numbers & locations before disconnecting.

ATC MAGAZINE MAINTENANCE POINTS

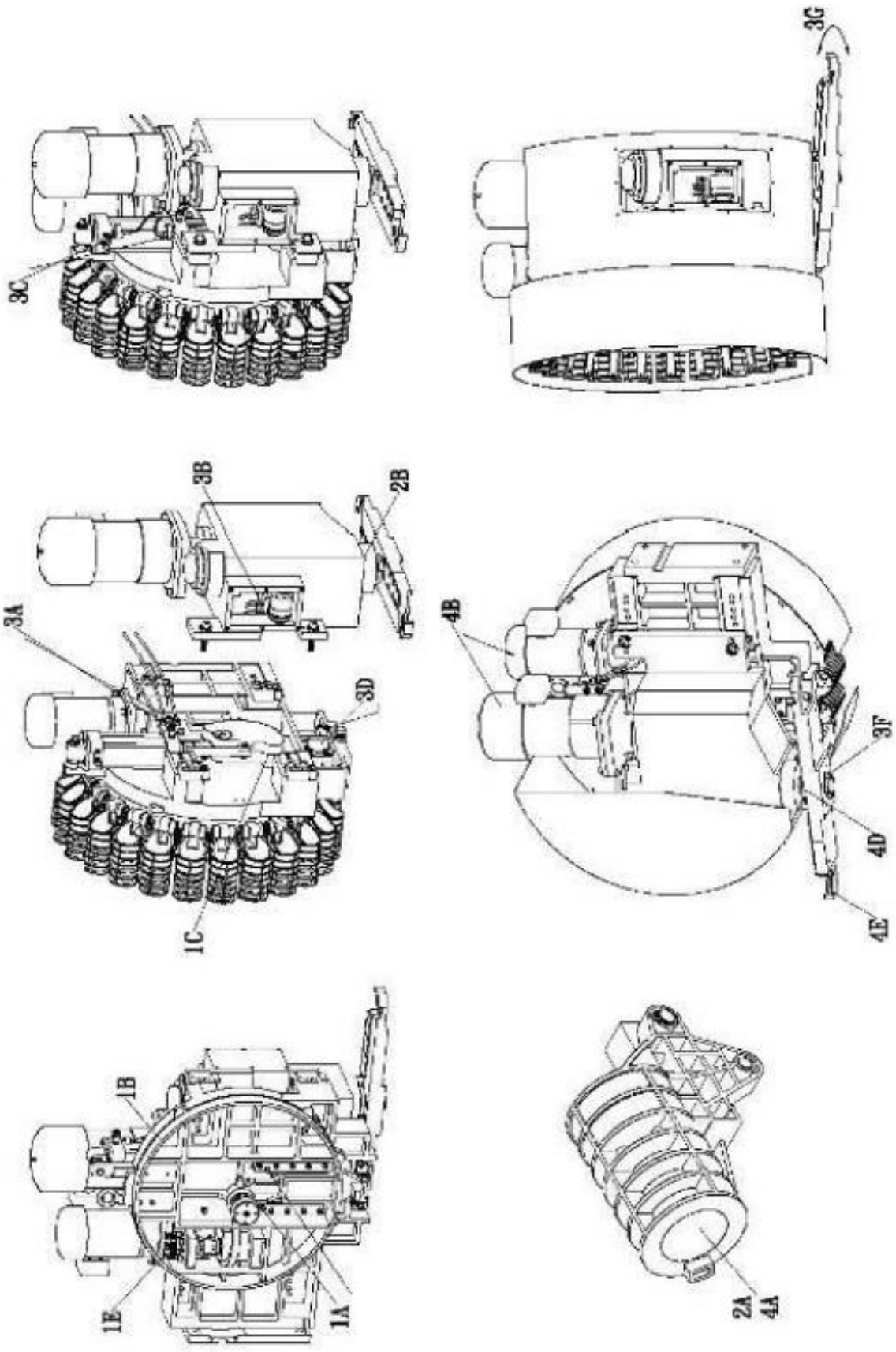

G. Magazine maintenance main points							
1	Lubri-cation	A	Carousel pot guideway	Take off number cover, fill oil manually	Grease Gun	Half year	Grease
		B	Pot slide	Take off sheet metal, fill	Grease Gun		Grease
		C	Arm slide block & position pin	Take off sheet metal cover, clean & fill oil manually			Grease
		D	Cam Slide	Take off ATC cover, fill lubrication oil manually	Grease Gun		Grease
		E	Motor Gear	Take off front cover & outer sheet	Grease Gun		Grease
2	Cleaning	A	Inner taper face of pot	Clean pot			
		B	Change ATC oil	Drain the old oil, and fill		Once a month	SHELL TELLUS 32
3	Loosen Check	A	Sensor switch for magazine	Check manually		Half year	
		B	Sensor switch for ATC	Check manually			
		C	Sensor switch for cylinder	Check manually			
		D	Limit switch	Check manually & optically			
		E	Bolts	Check manually			
		F	Bolts on arm	Check manually			
		G	Shake the arm to decide if backlashes too big	Check manually & inaccuracy can't			
		H	Check the carousel body	Check manually			
		I	Check tool magazine	Check manually			
4	Other check	A	Pot ball is falling down	Check manually			
		B	Excessive noise or heat from motor	Check manually			
		C	Check the air pressure for the cylinder solenoid valve	Check manually			
		D	Oil leak from ATC output shaft	Check manually			
		E	V shape flange of ATC arm to wear and tear	Check manually			
		F	The oil level lower of ATC oil tank	Check manually		Before power	

6.0 – DRAWINGS & PARTS LIST

828 CONTROL ELECTRICAL PANEL LAYOUT

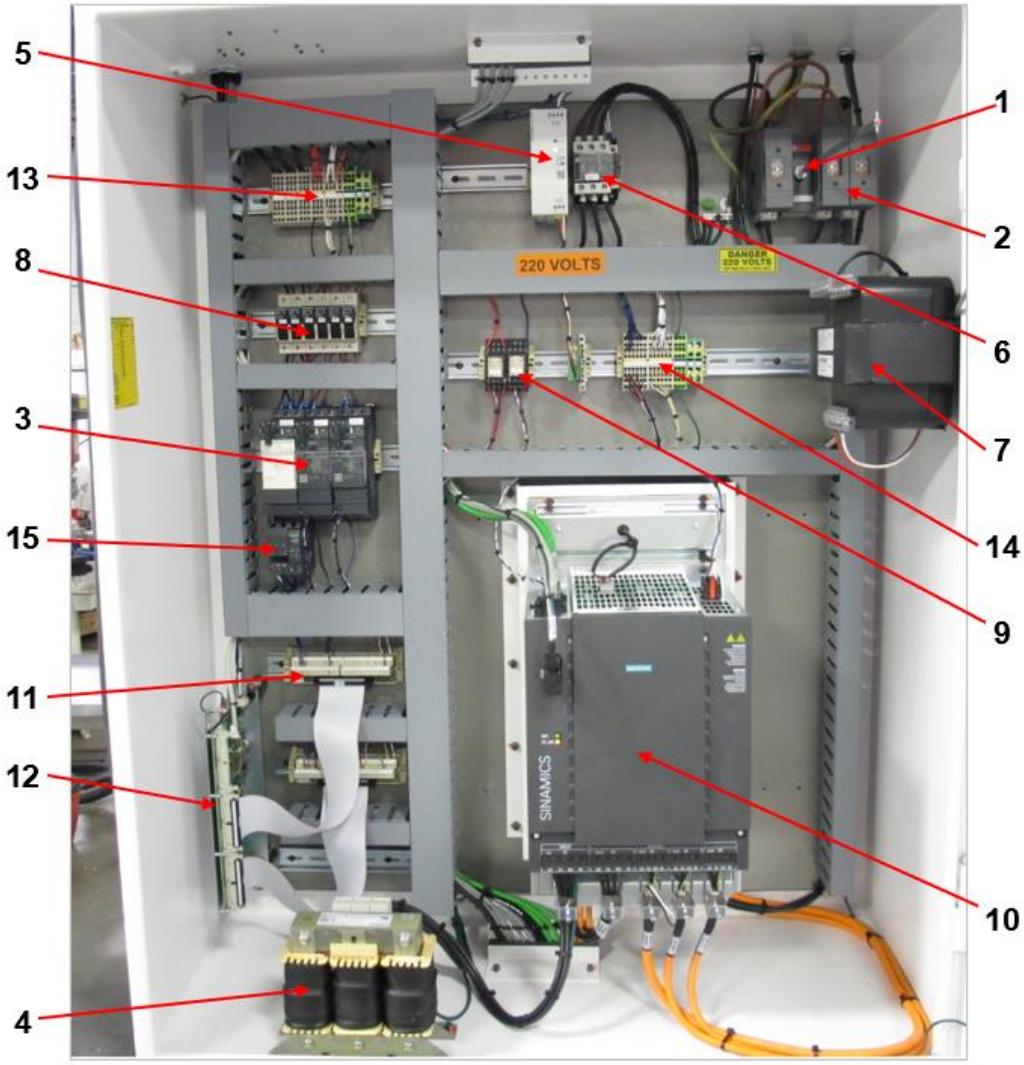

828 CONTROL ELECTRICAL PANEL – PARTS

REF	PART NO.	DESCRIPTION	PARTS NAME	QTY
1	SWT-5064	Main Disconnect		1
2	MSE-1912	Fuse Block		1
3		Motor Controller Overloads		1
4		Line Choke		1
5	MSE-2940	24 VDC POWER SUPPLY		1
6	MSE-1410	MC1 Magnetic Contactor		1
7	MSE-1610	Transformer		1
8		Fuse Panel		1
9		Contact Relays		1
10		Combi Drive		1
11		I/O Breakout Board		1
12	MSE-1330	I/O Card		1
13		Terminal Block		1
14		Terminal Block		1

828 FRONT CONTROL PANEL LAYOUT

REF	PART NO.	DESCRIPTION	PARTS NAME	QTY
1	MON-4378	Siemens Monitor NCU		1
2	CMB-3202	Siemens Control Panel		1
3	MSM-8210	Keys (3)		1 set
4	SWT-6210	E-Stop w/ Contact Block		1

ELECTRIC ARM TYPE ATC DRAWING - 1

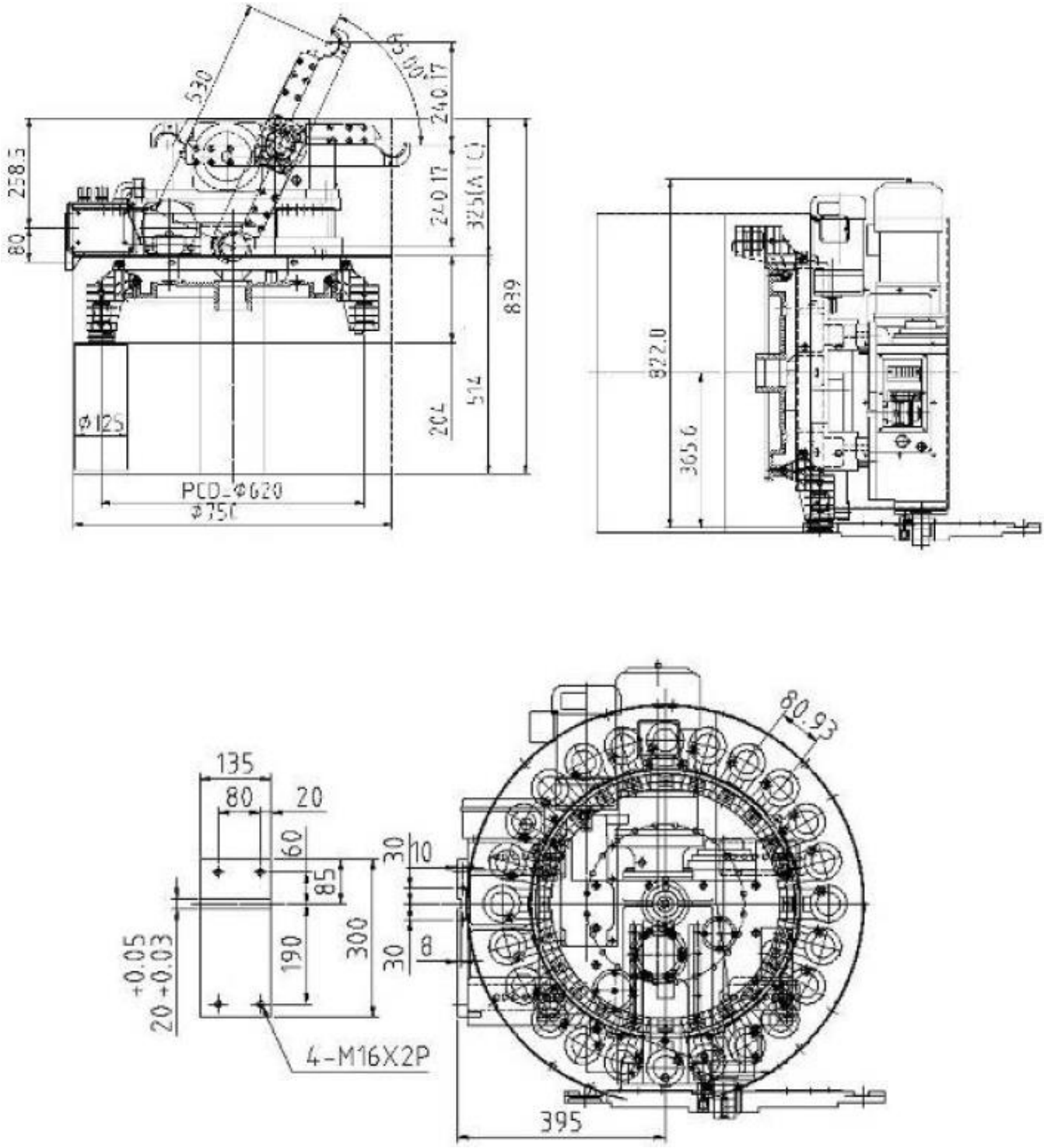

ELECTRIC ARM TYPE ATC DRAWING – 2

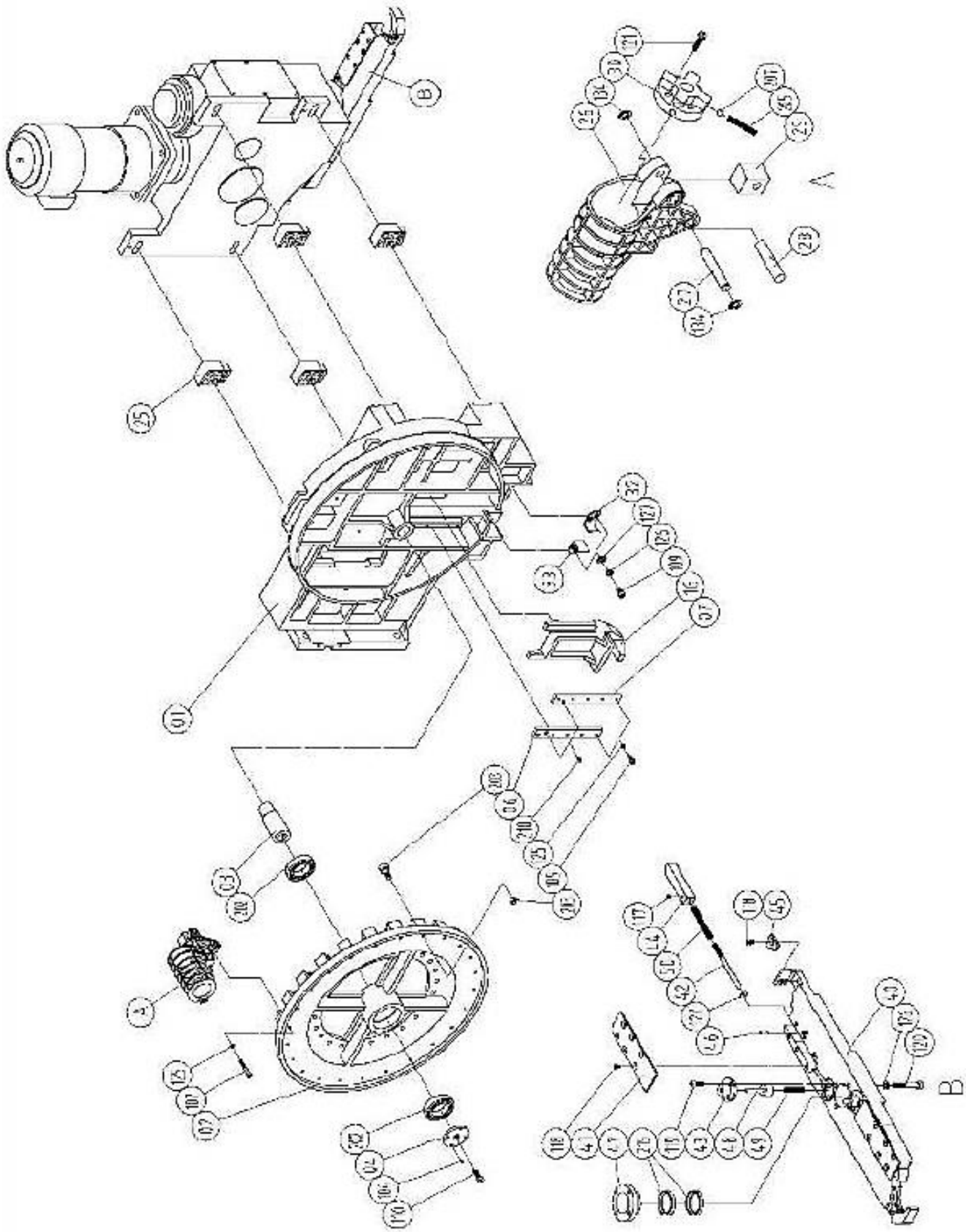

ELECTRIC ARM TYPE ATC DRAWING – 3

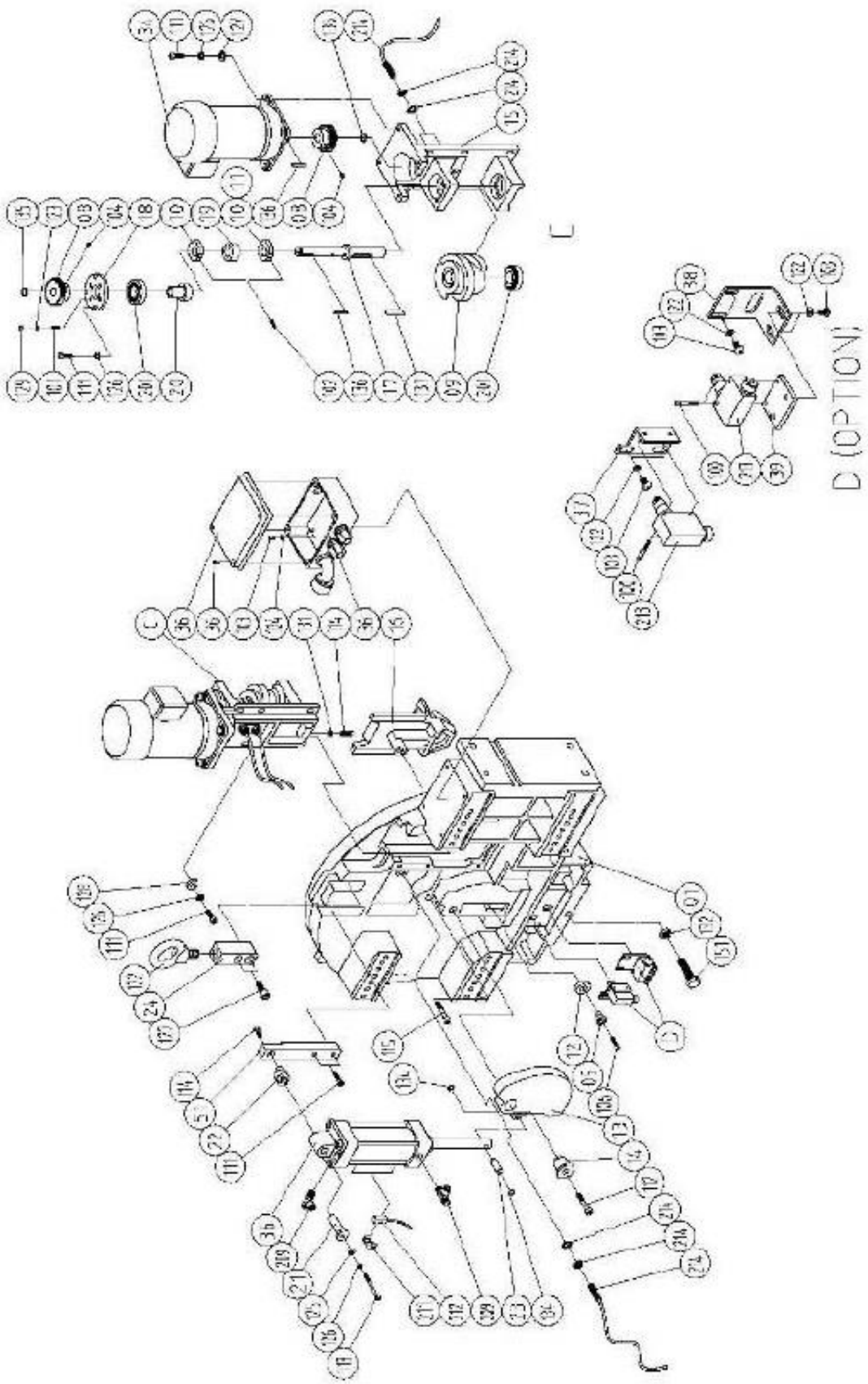

ELECTRIC ARM TYPE ATC - PARTS LIST

No.	Part No.	Part Name	Material / Spec.	QTY	Remark
01	MBX420200	New case	FC-25	1	24T
02	MBX420080	24T Disk plate	FC-25	1	
03	MBX410010	Disk rotate shaft	S45C	1	
04	MBX410030	Fixed cover of rotate shaft	S45C	1	
05	MBX410070	Sleeve of rocker arm	S45C	1	
06	MBX410090	Lock plate right slide seat	S45C	1	
07	MBX410100	Fixed plate of left slide seat	S45C	1	
08	MBX410150	Gear	S45C	2	
09	MBX410220	24 divide up turntable of cam	SCM435	1	
10	MBX410250	Single reaction block (On)	Powder metallurgy	1	
11	MBX411000	Single reaction block (Off)	Powder metallurgy	1	OPTION
12	MBX410290	Rotor of tool upside down	SC45	1	
13	MBX410740	A rocker arm of tool upside down	FCD55	1	
14	MBX410750	A rocker arm's arbor	S45C	1	
15	MBX410760	A cam seat	FCD50	1	
16	MBX410770	24T Tool upside down paw	FCD55	1	
17	MBX410780	An axle center of cam	S45C	1	
18	MBX410790	Bearing cover	S45C	1	
19	MBX410800	Collar	S45C	1	
20	MBX410810	Sleeve of bearing	S45C	1	
21	MBX410850	Fixed shaft of cylinder	S45C	1	
22	MBX410870	Eccentric shaft of cylinder	S45C	1	
23	MBX410880	Connect shaft of piston rod	S45C	1	
24	MBX411010	Fixed block of flying rings	S45C	1	
25	MBX450630	Interface board	AL-6061-T6	4	Ref (DEX65°× 530 L)
26	MBX460010	Tool pot (60°)	POM	24	
27	MBX460020	Rotate shaft of tool pot	S45C	24	
28	MBX460030	Lock shaft of tool pot	S45C	24	
29	MBX460040	Pull block of tool pot	Powder metallurgy	24	
30	MBX460240	Fixed block of pull stud	POM	24	
31	MBX460180	Spring	Piano wire	96	
32	MCX410230	Orientation seat of left pot	SPHC	1	
33	MCX410240	Orientation seat of right pot	SPHC	1	
34	MBX480140	Decelerator of gear motor	Hardware	1	
35	MBX480150	Cylinder of tool pot up & down	Hardware	1	
36	MBX480190	Wiring connect box	Hardware	1	
37	MBX411200	Limit switch fixed seat 1	SPHC	1	
38	MBX411210	Limit switch fixed seat 2	SPHC	1	
39	MBX411220	Limit switch fixed seat 3	SPHC	1	
40	MBX470130	Arm-530L	FCD-50	1	
41	MBX470340	Fixed plate	SPHC	2	
42	MBX470420	Slide block of stop tip	S45C	2	
43	MBX470460	Sleeve of stop tip	S45C	2	
44	MBX470480	Slide & fixed block	S45C	2	
45	MBX470490	Lock key	SS41	2	

ELECTRIC ARM TYPE ATC - PARTS LIST CONTINUED

46	MBX410280	ψ8 Stop tip	S45C	2	
47	MBX470690	Fixed collar	S45C	1	
48	MBX470720	Stop tip	SCM415	2	
49	MBX470740	Spring ψ1.2×9od×14T×41L	Piano wire	2	For stop tip
50	MBX470750	Spring ψ1.2×11od×20T×78.5L	Piano wire	2	For Slide block of stop tip
51	MBX410860	Cylinder fixed block	S45C	1	
100		Hexagonal bolt	M4×0.7P-25L	4	For limit switch
101		Stop bolt	M5×0.8P-20L	4	
102		Stop bolt	M5×0.8P-25L	2	
103		Hex. socket head screw	M5×0.8P-12L	4	Limit switch (OP)*10 PCS
104		Stop bolt	M6×1P-8L	6	
105		Hexagonal bolt	M6×1P-20L	10	
106		Hexagonal bolt	M6×1P-25L	1	
107		Hexagonal bolt	M6×1P-40L	24	Compose with 20T Disk*20PCS
108		External Hexagonal bolt	M6×1P-20L	1	Origin point reaction
109		Hexagonal bolt	M8×1.25P-16L	4	
110		Hexagonal bolt	M8×1.25P-20L	1	
111		Hexagonal bolt	M8×1.25P-25L	14	
112		Hexagonal bolt	M8×1.25P-45L	1	
113		Hexagonal bolt	M8×1.25P-65L	1	
114		External Hexagonal bolt	M8×1.25P-30L	1	
115		Hexagonal bolt	M10×1.5P-65L	1	
116		Hexagonal bolt	M12×1.75P-20L	1	
117		Stop bolt	M6×1P-6L	2	For arm
118		Shallow head screw	M6X1P-10L	14	For arm
119		Hexagonal bolt	M6×1P-16L	6	For arm
120		Hexagonal bolt	M8×1.25P-55L	4	For arm
121		Self-tap screw	3/16 × 1"	96	
122		An eye ring	M16	1	
123		Spring washer	M5	4	
124		Flat washer	M5	4	
125		Spring washer	M6	34	Compose with 20T
126		Spring washer	M8	20	
127		Flat washer	M8 × 2T	14	
128		Flat washer	M8 × 5T	6	
129		Nut	M5 × 0.8P	4	
130		Nut	M6 × 1P	2	
131		Nut	M8 × 1.25P	1	
132		Nut	M16 × 1.5P	1	
133					
134		C Ring (External)	S-10	50	Compose with 20T Disk* 42 PCS
135		C Ring (External)	S-18	2	
136		Single side round key	5 × 5 × 28L	2	
137		Double side round key	8 × 7 × 40L	1	
201	GKW030205	Angular ball bearing	30205JR(HIC)	2	
202	GKW006008	Deep groove ball bearing	6008 ZZ	2	
203	GKWCF0010	Bearing for cam (With M10 nut)	CF-10	24	20T- 20 PCS

ELECTRIC ARM TYPE ATC - PARTS LIST CONTINUED

204					
205	MBX460180	Spring	ψ1.2×7.8od×10T×25L	96	20T- 80 PCS
206					
207		Steel ball	ψ8	96	
208					
209	EDWN00001	Air throttle	1/4 × ∮8	2	
210	FEWN10002	Oil filler joint	1/8 PT	2	
211	MBX480450	Sensor fixed jig	PM-10	2	
212	EAWC00001	Magnetism reed switch	LS-BD2	2	
213	EAWA00001	Micro limit switch	YAMATAKA SL1-A	2	
214	EAWB00001	Proximity switch	BALLUFF-PSC40B	3	Sensor+Nut+Washer
215	GLW040045	Taper cone Collar	40 × 45	2	

ELECTRIC ARM TYPE ATC – INPUT SHAFT DRAWING

No.	Parts NO.	Specification	Q'ty	No.	Parts NO.	Specification	Q'ty
101A	A402050000A1	Case	1	218	DFKD*8*20	Double circle keys 8*8*20	1
101B	A402050000B1	Case cap	1	219	DFK10*8*55	Double circle keys 10*8*55	1
102	A402A0100001	Cam shaft	1	224	HI-M5*16L	Inside hexagonal screw M5*16L	12
103	A402A0200001	Tuneup cap	2	225	HI-M5*20L	Inside hexagonal screw M5*20L	2
104	A402A0300001	Tuneup screw cap	2	227	HI-M5*25L	Inside hexagonal screw M5*25L	13
105	A402A0400001	Cam shaft sprocket	1	226	HI-M5*35L	Inside hexagonal screw M5*35L	2
114	A402C0100000	Cam	1	241	PT1/2"	Oil plugger PT1/2"	4
127	A402FD100001	Big umbrella gear	1	242	OI-26	Oil plugger(#26mm)	1
201	HR30206	Tapered roller bearings 32MM	2	248	PIN-T-8*32L	Taper pin #8*32L(1:50)	3
213	O-55*2	O ring #55*2	2	247	PIN-P-8*32L	Parallelism pin #8*32L	2
214	O75	O ring O75	2				

INPUT SHAFT

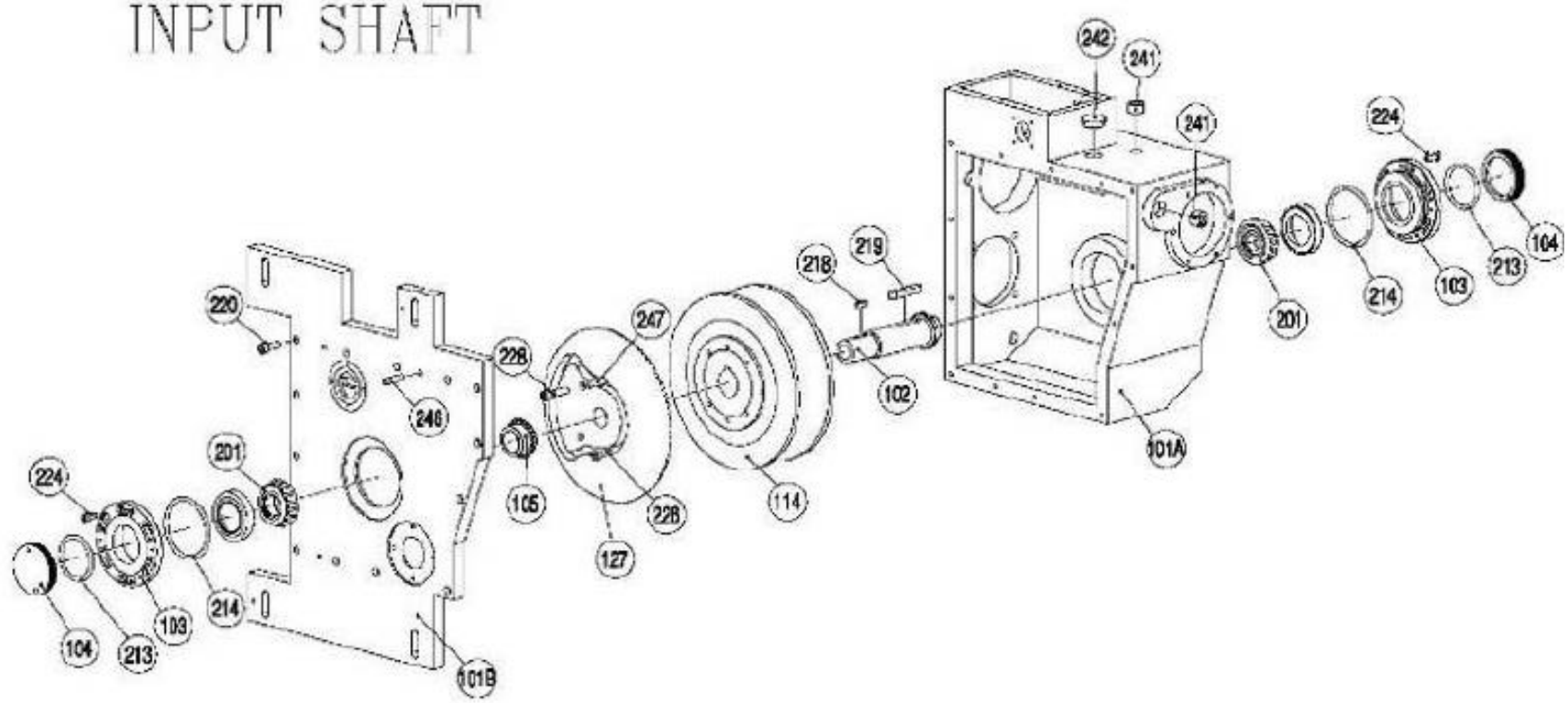

ELECTRIC ARM TYPE ATC – OUTPUT PART & MOTOR PART DRAWING

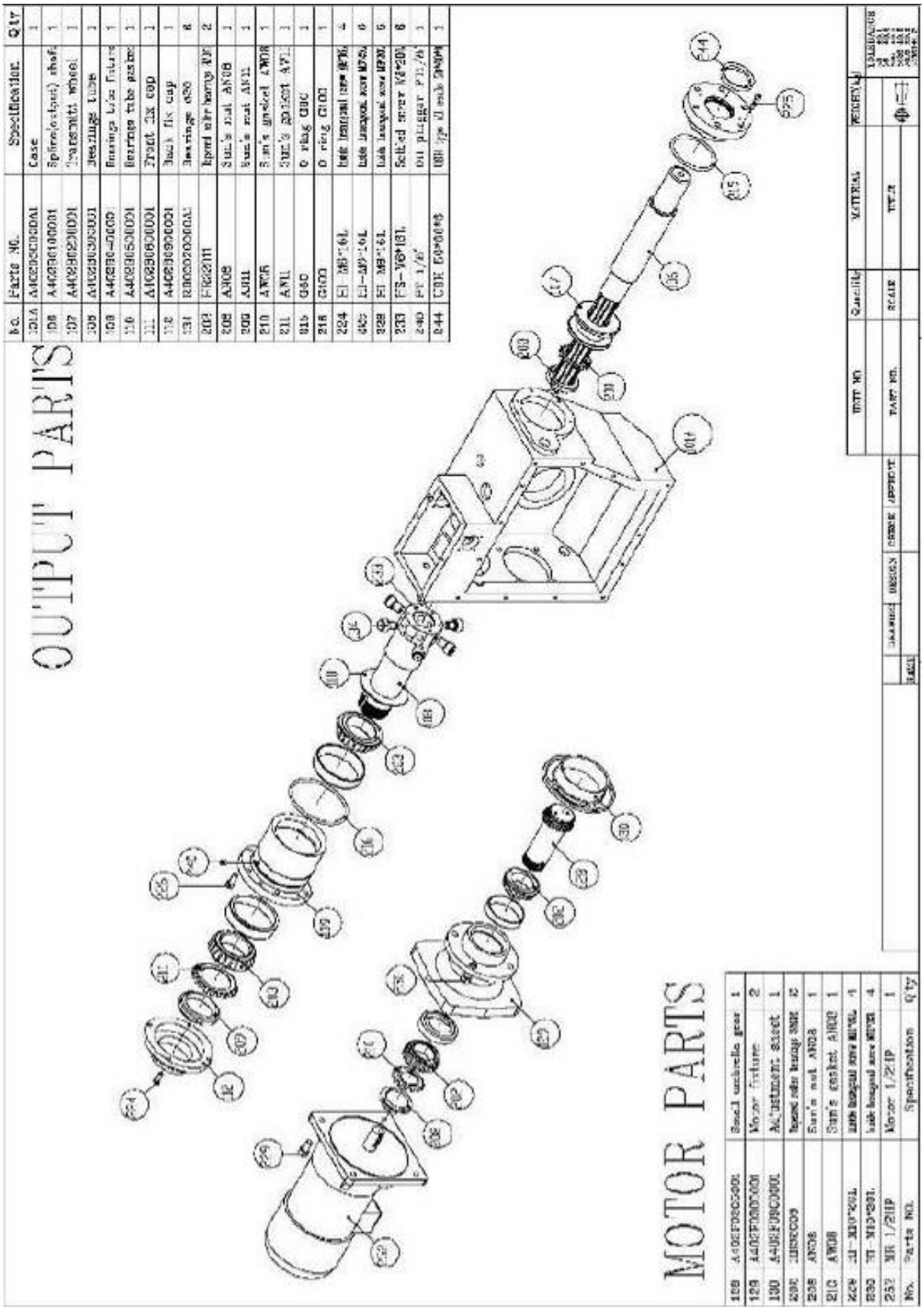

ELECTRIC ARM TYPE ATC – SIGNAL PARTS DRAWING

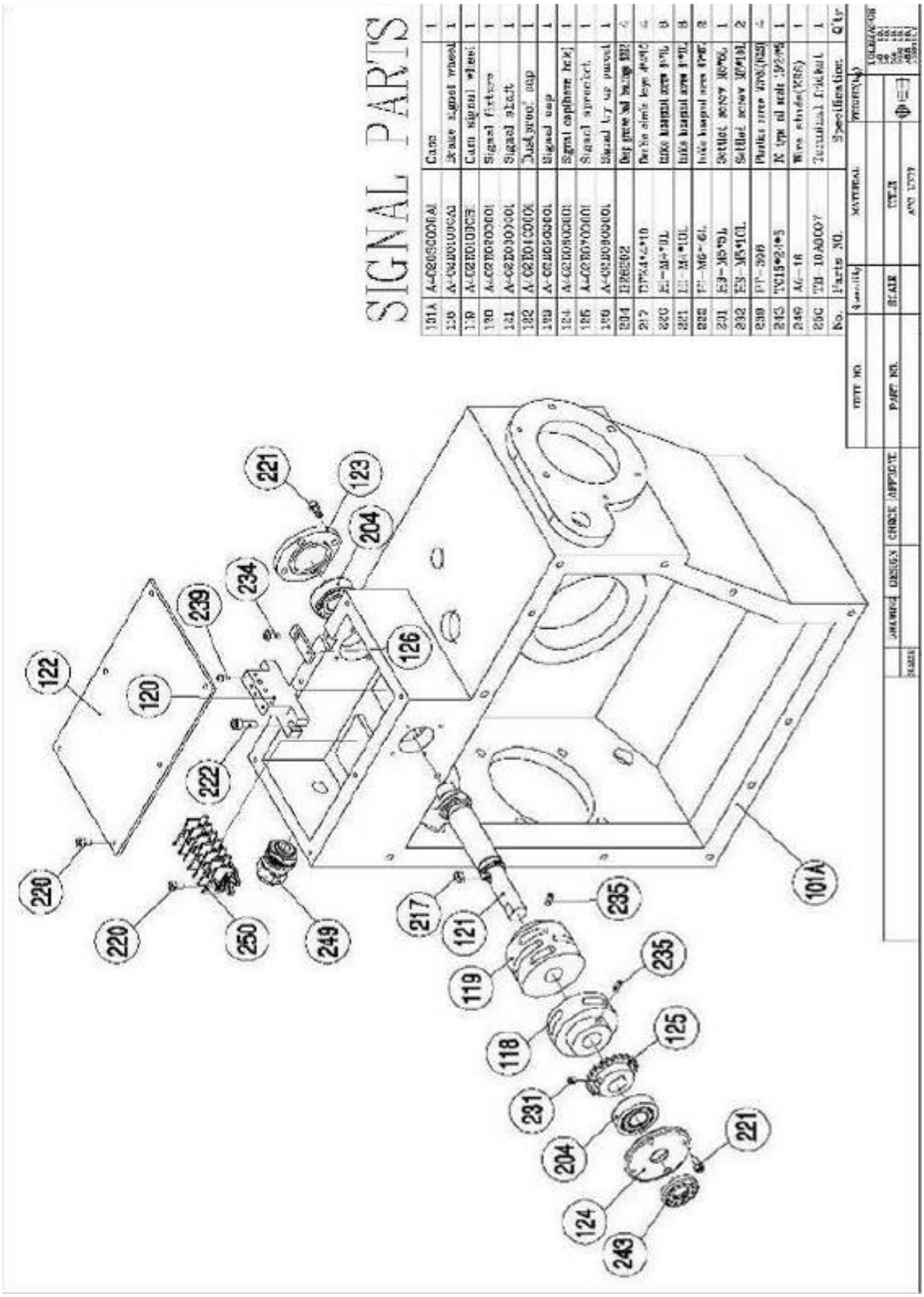

ELECTRIC ARM TYPE ATC – ROCKER PARTS & IDLER SPROCKET DRAWING

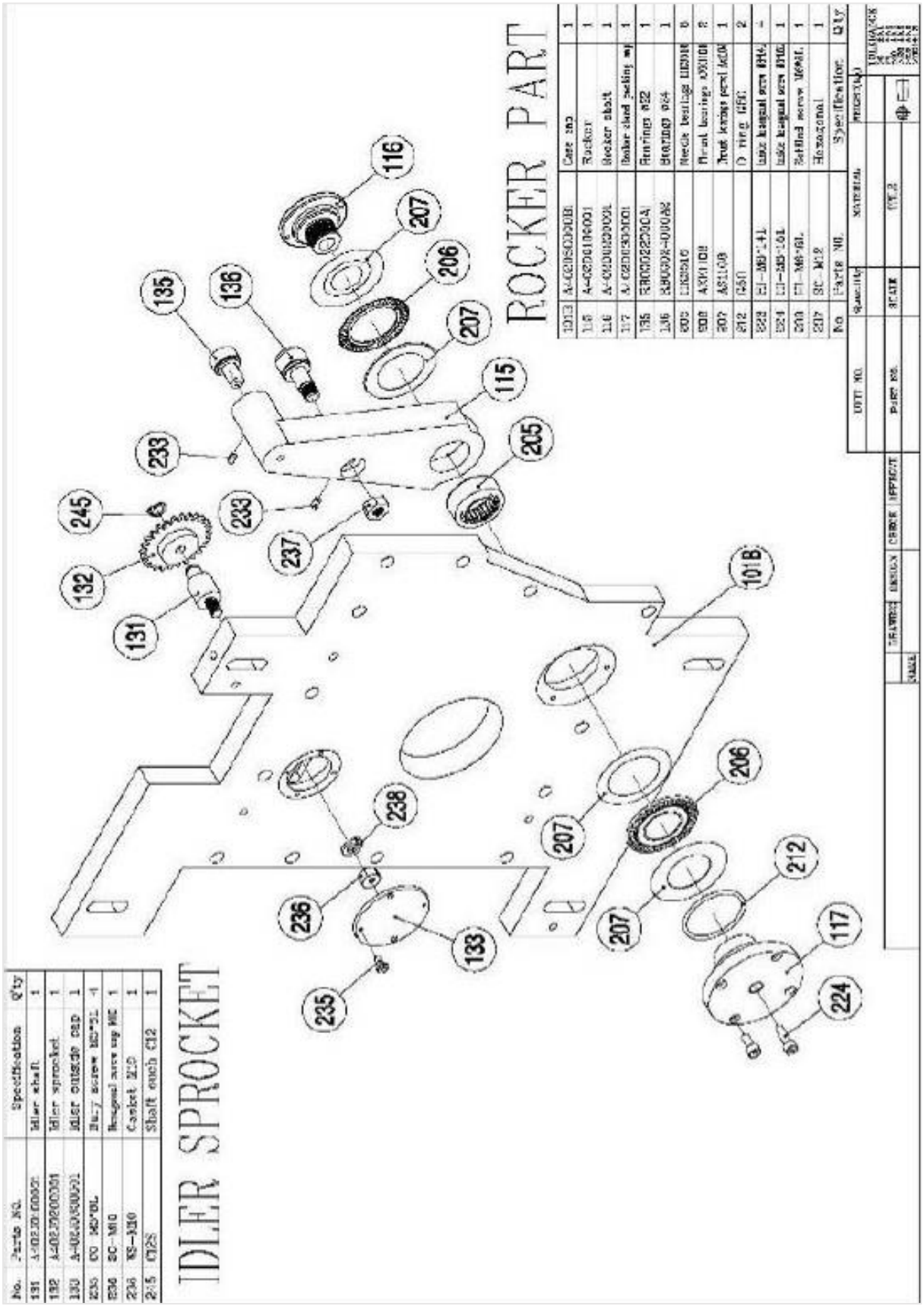

MC-B Z-AXIS COLUMN ASSEMBLY DRAWING

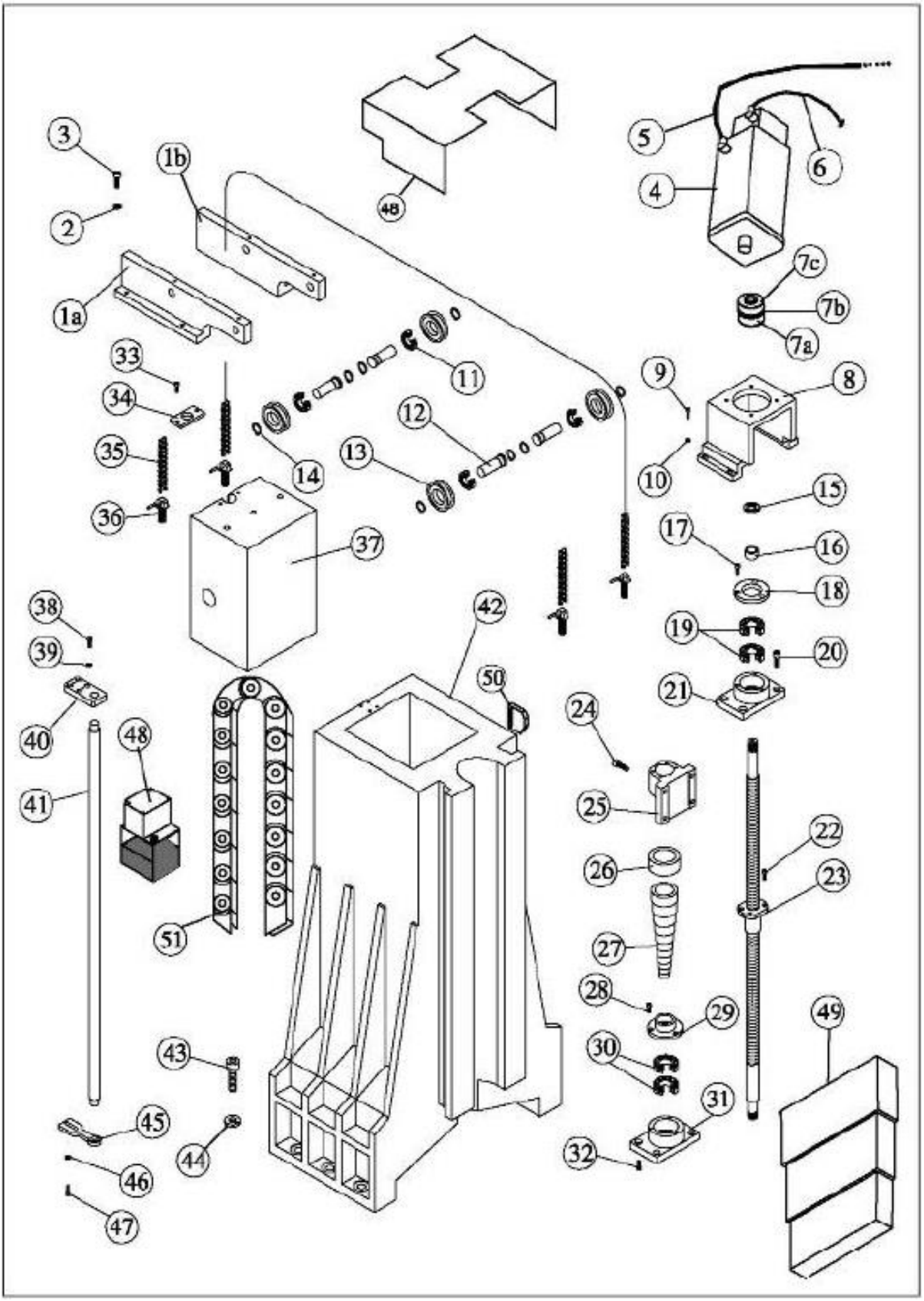

MC-B SERIES Z-AXIS COLUMN ASSEMBLY – PARTS LIST

ITEM	Part No.	Description	Qty
1a		Casting Chain Support Left MC 40	1
1a		Casting Chain Support Left MC 60	1
1b		Casting Chain Support Right MC 40	1
1b		Casting Chain Support Right MC 60	1
2		Washer	4
3		Screw	4
4		Motor Z Axis, Siemens	1
4	MTR-3156	Motor Z Axis, Anilam AM1160EB w/brake MC 40	1
4	MTR-3434	Motor Z Axis, Anilam AM1550CB w/brake MC 60	1
4	MTR-3826	Motor Z Axis, FANUC 0i BiS 12/3000 w/brake MC 40/60	1
5		Encoder Cable Siemens Axis Motor	
5	MSE-5310	Encoder Cable Anilam 6000 Axis Motor	1
5	MSE-6210	Encoder Cable FANUC 0i Z Axis Motor	1
6		Power Cable Siemens Axis Motor	
6	MSE-1980	Power Cable ANILAM 6000 Axis Motor MC 40/50	1
6	MSE-6212	Power Cable FANUC 0i Axis Motor	1
7a		Coupling Half Ballscrew X-Y-Z Axis MC 40/60	1
7b	BEN-2610	Coupling Spider	1
7c		Coupling Half Siemens Motor X-Y-Z Axis	
7c		Coupling Half Anilam Motor X-Y-Z Axis MC 40	1
7c		Coupling Half Anilam Motor X-Y-Z Axis MC 60	1
7c		Coupling Half Fanuc Motor X-Y-Z Axis MC 40/60	1
8		Plate Motor Siemens Z Axis	
8		Plate Motor Anilam Z Axis MC 40	1
8		Plate Motor Anilam Z Axis MC 60	1
8		Plate Motor Fanuc Z Axis MC 40/60	1
9		Screw	4
10		Washer	4
11	BEN-1225	Bearing Chain Support	4
12		Shaft Chain Bearing Support	4
13		Pulley Chain Guide	4
14		Snap Ring	8
15		Nut Ballscrew Bearing X-Y-Z Axis MC 40/60	1
16	BEN-4132	Spacer Z Axis Ballscrew MC 40/60	1
17		Screw	3
18	BEN-4134	Clamp Race Outer Bearing X-Y-Z Axis MC 40/60	1
19	BEN-1220	Thrust Bearing X, Y Z Ballscrew MC 40/60	2

MC-B X-AXIS TABLE ASSEMBLY DRAWING

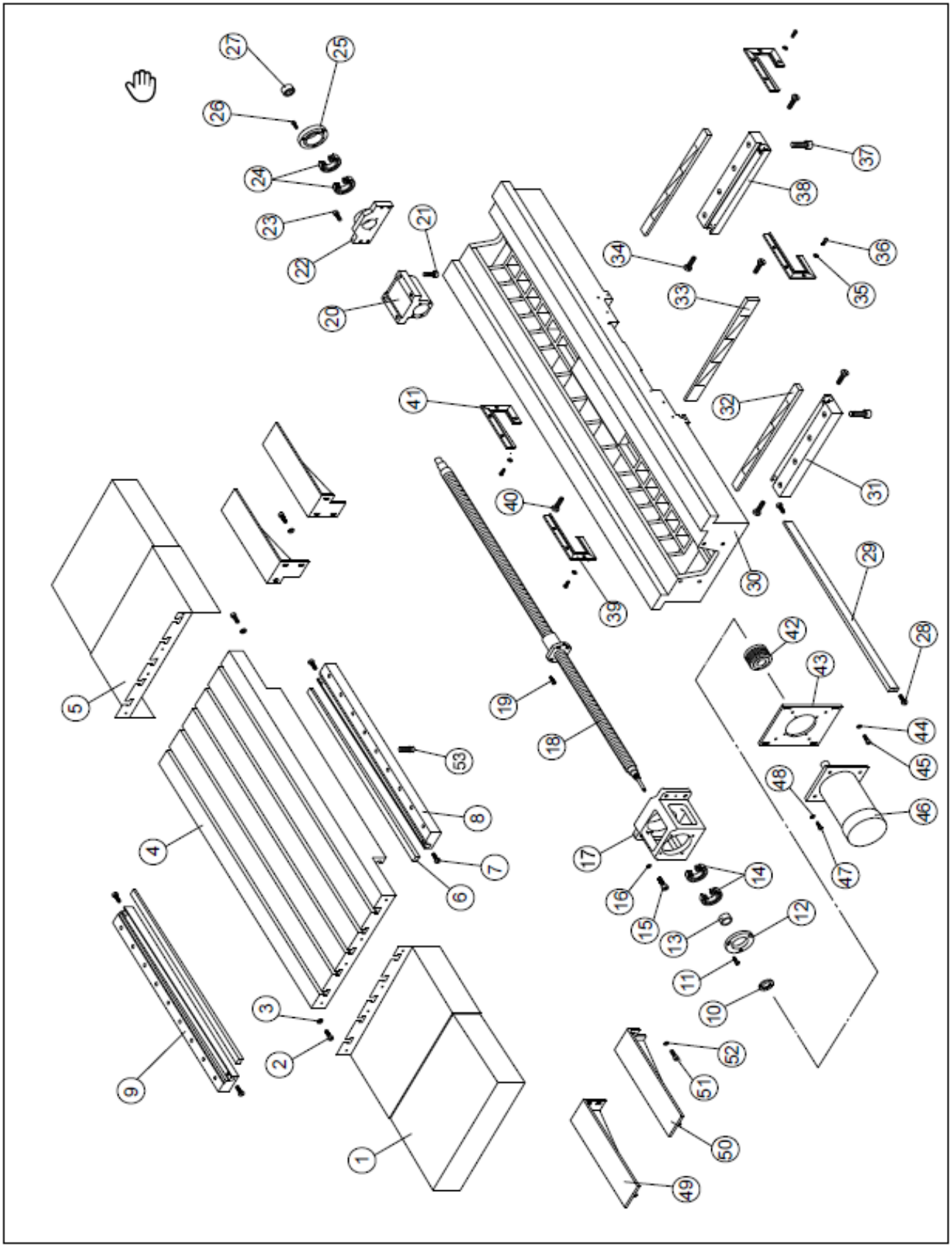

MC-B X-AXIS TABLE ASSEMBLY - PARTS LIST

X-AXIS TABLE

ITEM	Part No.	Description	Qty
1	BEN-1156	WayCover Right/Left X Axis MC30	SET
1		WayCover Right/Left X Axis MC45	SET
1	BEN-1162	WayCover Right/Left X Axis MC60	SET
2		Screw	8
3		Washer	8
4		Table	1
6		Gib Front/Rear Lower X Axis MC 40	2
6		Gib Left/Right Front/Rear Lower X Axis MC 60	4
7	BEN-4000	Gib Screw	12
8		Gib Block Front Lower X Axis MC 40	1
8		Gib Block Left Front/Right Rear Lower X Axis MC 60	2
9		Gib Block Rear Lower X Axis MC 40	1
9		Gib Block Right Front/Left Rear Lower X Axis MC 60	2
10		Nut Ballscrew Bearing X-Y-Z Axis MC 40/60	1
11		Screw	3
12	BEN-4134	Clamp Race Outer Bearing X-Y-Z Axis MC 40/60	2
13		Spacer	1
14	BEN-1220	Bearing Thrust Front Ballscrew X-Y-Z Axis MC 40/60	2
15		Screw	4
16		Washer	4
17		Housing Motor X Axis	1
18	BEN-4106	X-Axis Ballscrew MC 30	1
18	BEN-4112	X-Axis Ballscrew MC 45	1
18	BEN-4120	X-Axis Ballscrew MC 60	1
19		Screw	5
20		Yoke X Axis MC 30	1
20		Yoke X Axis MC 45	1
20	BEN-4124	Yoke X Axis MC 60	1
21		Screw	4
22		Housing Bearing X Axis MC 40/60	1
23		Screw	4
24	BEN-1220	Bearing Radial Rear Ballscrew X-Y-Z Axis MC 40/60	2
25		Cover Bearing MC 40/60	1
26		Screw	3
27		Gib Side X Axis MC 40	1
27		Gib Left/Right Side X Axis MC 60	2
28		Saddle	1
29		Gib Block Left Lower Y Axis MC 40/60	1

MC-B X-AXIS TABLE ASSEMBLY – PARTS LIST CONTINUED

30		Gib Lower Y Axis	2
31		Gib Side Y Axis MC 40/60	1
32		Washer	12
33		Screw	12
34		Gib Block Right Lower Y Axis MC 40/60	1
35		Screw	2
36		Y Axis Wiper MC 40	4
36		Y Axis Wiper MC 60	4
37		X Axis Wiper MC 40	4
37		X Axis Wiper MC 60	4
38		Coupling Half Ballscrew X-Y-Z Axis MC 40/60	1
39	BEN-2610	Coupling Spider	1
40		Coupling Half Motor Siemens X-Y-Z Axis	1
40		Coupling Half Motor Anilam X-Y-Z Axis MC 40	1
40		Coupling Half Motor Anilam X-Y-Z Axis MC 60	1
40		Coupling Half Motor Fanuc X-Y-Z Axis MC 40/60	1
41		Plate Motor Siemens X Axis MC	1
41		Plate Motor Anilam X Axis MC 40	1
41		Plate Motor Anilam X Axis MC 60	1
41		Plate Motor Fanuc X Axis MC 40/60	1
42		Washer	4
43		Screw	4
44		Motor X/Y Axis, Siemens	1
44	MTR-3154	Motor X/Y Axis , Anilam AM1160E MC 40	1
44	MTR-3432	Motor X/Y Axis , Anilam AM1550C MC 60	1
44		Motor X/Y Axis, FANUC 0i BiS 12/3000 MC 40/60	1
45		Encoder Cable Siemens Axis Motor	1
45	MSE-5310	Encoder Cable Anilam 6000 Axis Motor	1
45		Encoder Cable FANUC 0i X-Y Axis Motor	1
46		Power Cable Siemens Axis Motor	1
46		Power Cable ANILAM 6000 Axis Motor MC 60/100	1
46		Power Cable FANUC 0i Axis Motor	1
47		Bracket Left/Front, Right/Rear X Axis	2
48		Bracket Left/Rear, Right/Front X Axis	2
49		Screw	12
50		Washer	12
51		Screw	18
52	SWT-5014	Home Switch	1
53		Dog Home Switch X Axis	1

MC-B Y-AXIS BASE ASSEMBLY DRAWING

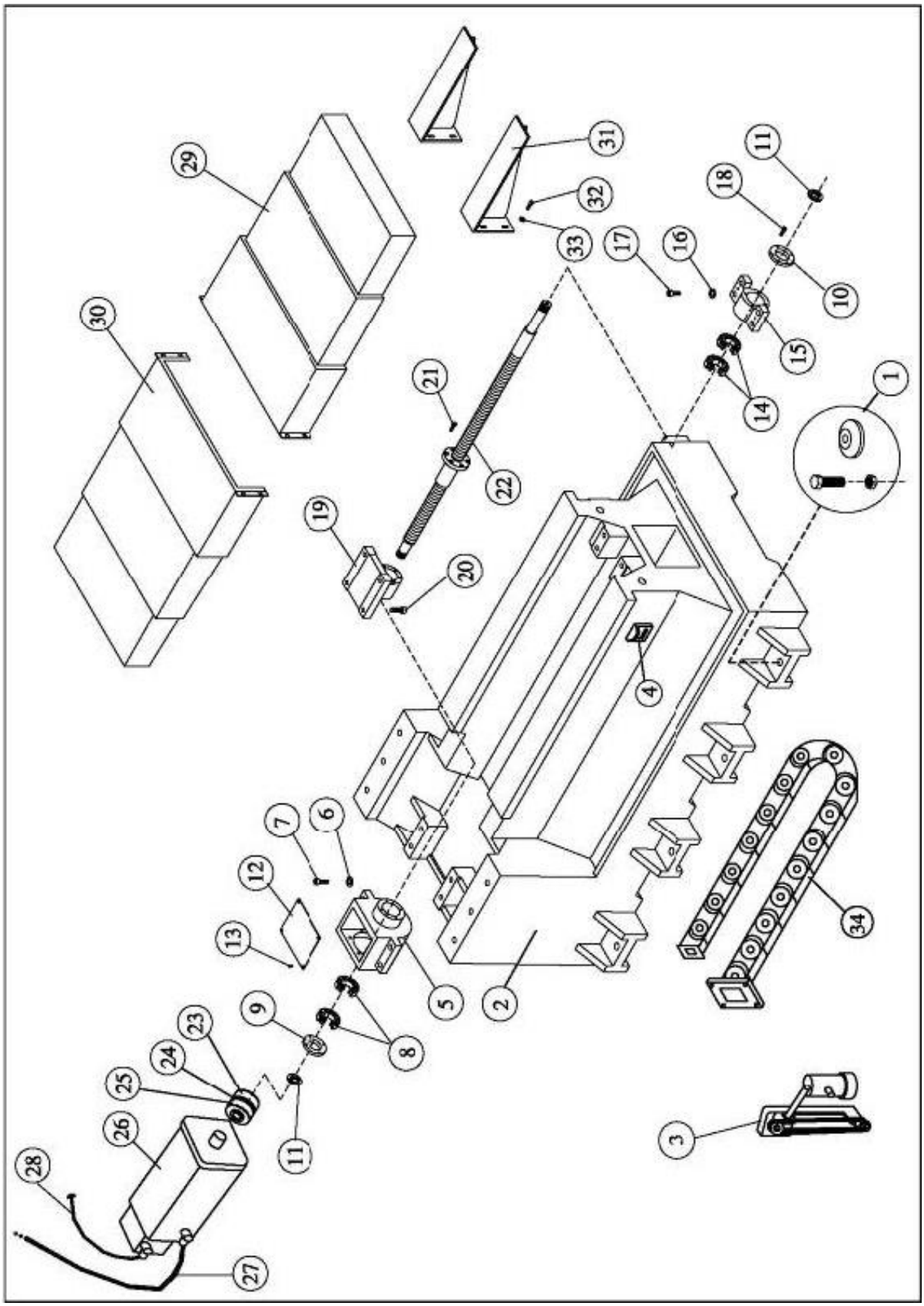

MC-B Y-AXIS BASE ASSEMBLY – PARTS LIST

Y-AXIS BASE

ITEM	Part No.	Description	Qty
1	BEN-1005	Leveling Pads and Bolts MC 40/60	SET(8)
2		Base Casting	1
3	MSE-3200	Oil Skimmer (Optional)	1
4		Dog Home Switch X-Y Axis all	1
5		Housing Motor & Thrust Bearing Y Axis	1
6		Washer	4
7		Screw	4
8	BEN-1220	Bearing Thrust Rear Ballscrew X-Y-Z Axis MC 40/60	2
9	BEN-4134	Clamp Race Outer Bearing X-Y-Z Axis MC 40/60	1
10		Cover Bearing MC 40/60	1
11		Nut Ballscrew Bearing X-Y-Z Axis MC 40/60	2
12	BEN-4128	Cover Motor & Thrust Bearing Housing Y Axis	1
13		Screw	4
14	BEN-1220	Bearing Radial Front Ballscrew X-Y-Z Axis MC 40/60	2
15		Housing Bearing Y Axis MC 40/60	1
16		Washer	4
17		Screw	4
18		Screw	4
19		Yoke Y Axis MC 40	1
19	BEN-4126	Yoke Y Axis MC 60	1
20		Screw	4
21		Screw	6
22	BEN-4104	Ballscrew Y Axis MC 40	1
22	BEN-4114	Ballscrew Y Axis MC 60	1
23		Coupling Half Ballscrew X-Y-Z Axis MC 40/60	1
24	BEN-2610	Coupling Spider	1
25		Coupling Half Motor Siemens	1
25		Coupling Half Motor Anilam X-Y-Z Axis MC 40	1
25		Coupling Half Motor Anilam X-Y-Z Axis MC 60	1
25		Coupling Half Motor Fanuc X-Y-Z Axis MC 40/60	1
26		Motor X/Y Axis, Siemens	1
26	MTR-3154	Motor X/Y Axis , Anilam AM1160E MC 40	1
26	MTR-3432	Motor X/Y Axis , Anilam AM1550C MC 60	1
26		Motor X/Y Axis, FANUC 0i BiS 12/3000 MC 40/60	1
27		Power Cable Siemens Axis Motor	1
27	ASY-6086	Power Cable ANILAM 6000 Axis Motor MC 60/100	1
27		Power Cable FANUC 0i Axis Motor	1
28		Encoder Cable Siemens Axis Motor	1
28	MSE-5310	Encoder Cable Anilam 6000 Axis Motor	1

MC-B Y AXIS BASE ASSEMBLY – PARTS LIST CONTINUED

28		Encoder Cable FANUC 0i X-Y Axis Motor	1
29	BEN-1155	Waycover Y-Axis Front MC 40	1
29	BEN-1252	Waycover Y-Axis Front MC 60	1
30	BEN-1150	Waycover Y-Axis Rear MC 40	1
30	BEN-1178	Waycover Y-Axis Rear MC 60	1
31		Bracket Y-Axis Waycover MC 40	2
31		Bracket Y-Axis Waycover MC 60	2
32		Washer	6
33		Screw	6
34		Track Y Axis MC 40	1
34		Track Y Axis MC 60	1

MC-B HEAD ASSEMBLY DRAWING

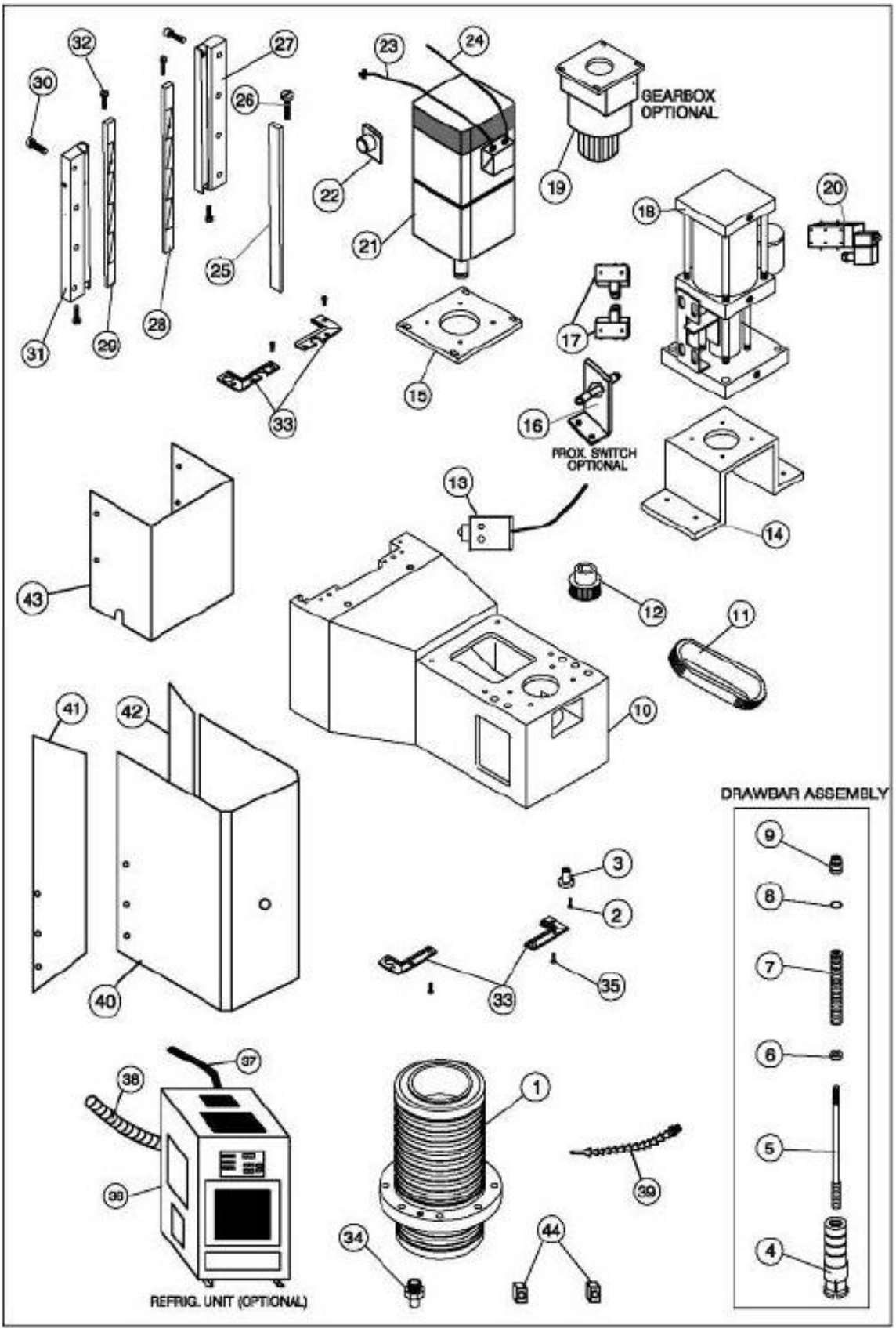

MC-B HEAD ASSEMBLY – PARTS LIST

MC SERIES HEAD ASSEMBLY

ITEM	Part No.	Description	Qty
1	BEN-1110	Spindle Cartridge 40 Taper 6,000 RPM	1
1	BEN-1112	Spindle Cartridge 40 Taper 8,000 RPM	1
1	BEN-1115	Spindle Cartridge 40 Taper 10,000 RPM	1
1	BEN-1116	Spindle Cartridge 40 Taper 12,000 RPM	1
1	BEN-1118	Spindle Cartridge 50 Taper 6,000 RPM	1
2		Screw	3
3		Coolant Fitting	3
4	BEN-1140	Drawbar Retention Finger MC (A) CAT 40	1
4	BEN-1314	Drawbar Retention Finger MC (B) CAT 40	1
5	DBR-2072	Drawbar Shaft	1
6		Drawbar Collar Lower Shaft	1
7	DBR-2080	Drawbar Belleville Washer - Must Purchase With 7A Below	126
7A	DBR-2082	Drawbar Washer - Use with 7 Above	1
8	DBR-2076	Drawbar Collar Upper Shaft	1
9	DBR-2078	Drawbar Nut	1
10		Headstock	1
11	BEN-1080	Spindle Belt MC 60/100	1
12		Pulley Spindle Motor Siemens 25 HP	1
12		Pulley Spindle Motor Siemens 40 HP	1
12	MSM-4110	Pulley Spindle Motor Anilam 6000 20 HP	1
12	MSM-4110	Pulley Spindle Motor Anilam 6000 30 HP	1
12	MSM-4110	Pulley Spindle Motor Fanuc 0i 20 HP	1
12	MSM-4110	Pulley Spindle Motor Fanuc 0i 30 HP	1
13	SWT-5014	Home Switch	1
14	DBR-2084	Drawbar Actuator Mounting Bracket	1
15		Spindle Motor Plate	1
16	BEN-1340	Prox. Switch Spindle Orient 10000/12000 RPM Gearbox Option	1
17	SWT-5110	Drawbar Limit Switch	2
18	DBR-2070	Drawbar Actuator Complete Set	1
19		Gearbox 2 Speed for Siemens Spindle Motor	1
19	MSM-6510	Gearbox 2 Speed MC for Anilam 20 HP Spindle Motor	1
19	MSM-6514	Gearbox 2 Speed for Anilam 30 HP Spindle Motor	1
19	MSM-6512	Gearbox 2 Speed for Fanuc 20 HP Spindle Motor	1
20	BEN-1058	Solenoid Valve 110 Vac	1
21		Spindle Motor Siemens 25 HP	1
21		Spindle Motor Siemens 40 HP	1
21	MTR-3136	Spindle Motor Anilam SM075C, 20 HP	1

MC-B HEAD ASSEMBLY – PARTS LIST CONTINUED

21	MTR-3142	Spindle Motor Anilam SM120C, 30 HP	1
21	MTR-3870	Spindle Motor FANUC 0i Bi 8/8000, 20 HP	1
21	MTR-3872	Spindle Motor FANUC 0i Bi 12/7000, 30 HP	1
22	SWT-5300	PushButton Switch	1
23		Encoder Cable Siemens Spindle Motor	1
23	MSE-5310	Encoder Cable Anilam 6000 Spindle Motor	1
23	MSE-6210	Encoder Cable FANUC 0i Spindle Motor	1
24		Power Cable Siemens Spindle Motor	1
24		Power Cable Anilam 6000 Spindle Motor	1
24		Power Cable Fanuc 0i Spindle Motor	1
25		Gib Side Z Axis MC 40	1
25		Gib Side Z Axis MC 60	1
26	BEN-4000	Screw Gib	2
27		Backing Plate for Right Back Gib Z Axis MC 40	1
27		Backing Plate for Right Back Gib Z Axis MC 60	1
28		Gib Back Z Axis MC 40	2
28		Gib Back Z Axis MC 60	2
30		Screw	10
31		Backing Plate for Left Back Gib Z Axis MC 40	1
31		Backing Plate for Left Back Gib Z Axis MC 60	1
32		Screw	4
33	BEN-1370	Wiper Z Axis MC 40	SET(2)
33	BEN-1372	Wiper Z Axis MC 60	SET(2)
34	BEN-1090	Coolant Nozzle for Spindle MC - NNPT-1/4-15	SET(4)
34	BEN-1092	Coolant Nozzle for Spindle MC - NNM-10-15	SET(4)
35		Screw	12
36	BEN-2054	Chiller for 10,000, 12,000 RPM Spindle & Geared Head	1
37		1/4" hydraulic hose (Black) for Chiller/Gearbox	1
38		1 1/2" steel reinforced hose for Chiller/Gearbox	1
39	MSM-1284	LOC-LINE 1/4" Hose	2
39	MSM-1286	LOC-LINE NPT Connector	2
39	MSM-1288	LOC-LINE 1/8" Round Nozzle	2
40		Sheet Metal Front Head MC 40	1
40		Sheet Metal Head Front MC 60	1
41		Sheet Metal Head Left MC 40	1
41		Sheet Metal Head Left MC 60	1
42		Sheet Metal Head Right MC 40	1
42		Sheet Metal Head Right MC 60	1
43	BEN-1260	Waycover Upper Z Axis MC 40	1
43	BEN-1262	Waycover Upper Z Axis MC 60	1
44	BEN-1000	Spindle keys 40 Taper	SET(2)
44	BEN-1002	Spindle keys 50 Taper	SET(2)

MC-B SERIES SHEETMETAL ASSEMBLY DRAWING

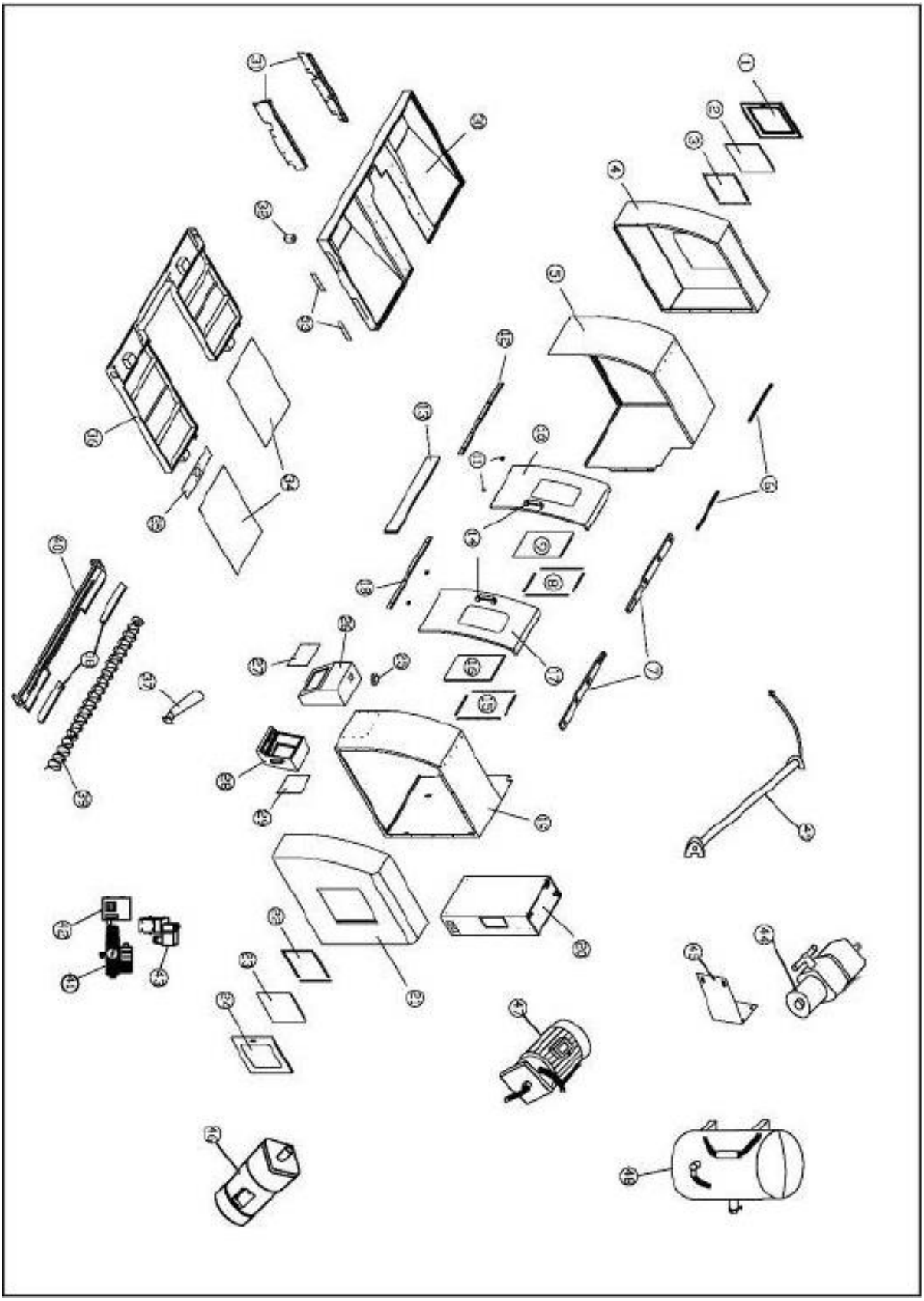

MC SERIES SHEET METAL

ITEM	Part No.	Description	Qty
1		Side Door Left MC 40	1
1		Side Door Left MC 60	1
2		Side Door Window Left MC 40	1
2		Side Door Window Left MC 60	1
3		Side Door Window Retainers Left MC 40	1 SET(4)
3		Side Door Window Retainers Left MC 60	1 SET(4)
4		Enclosure Left Side Extension MC 40	1
4		Enclosure Left Side Extension MC 60	1
5		Enclosure Left Side MC 40	1
5		Enclosure Left Side MC 60	1
6		Upper Door Track Mount MC 40	2
6		Upper Door Track Mount MC 60	2
7	BEN-2250	Upper Door Track MC 40	2
7	BEN-2252	Upper Door Track MC 60	2
8		Door Left Window Retainers MC 40	1 SET
8		Door Left Window Retainers MC 60	1 SET
9		Door Left Window MC 40	1
9		Door Left Window MC 60	1
10		Door Left MC 40	1
10	BEN-2264	Door Left MC 60	1
11		Door Roller	4
12		Door Left Rail MC 40	1
12		Door Left Rail MC 60	1
13		Enclosure Front 40	1
13		Enclosure Front 60	1
14		Handle Door	2
15		Door Right Window Retainers MC 40	1
15		Door Right Window Retainers MC 60	1
16		Door Right Window MC 40	1
16		Door Right Window MC 60	1
17		Door Right MC 40	1
17		Door Right MC 60	1
18		Door Left Rail MC 40	1
18		Door Left Rail MC 60	1
19		Enclosure Right Side MC 40	1
19		Enclosure Right Side MC 60	1
20		Electrical Cabinet MC 40/60	1

21		Enclosure Right Side Extension MC 40	1
21		Enclosure Right Side Extension MC 60	1
22		Side Door Window Retainers Right MC 40	1 SET(4)
22		Side Door Window Retainers Right MC 60	1 SET(4)
23		Side Door Window Right MC 40	4
23		Side Door Window Right MC 60	4
24		Side Door Right MC 40	1
24		Side Door Right MC 60	1
25		Console Base Pivot	1
26		Console Base Cabinet	1
27		Console Base Access Cover	1
28		Console Cabinet	1
29		Console Access Panel	1
30		Enclosure Base MC 40	1
30		Enclosure Base MC 60	1
31		Base Frame Enclosure Supports MC 40	2
31		Base Frame Enclosure Supports MC 60	2
32	BEN-2270	Enclosure Support Foot	4
33		Enclosure Base Side Cover MC 40	2
33		Enclosure Base Side Cover MC 60	2
34		Coolant Tank Cover MC 40	2
34		Coolant Tank Cover MC 60	2
35		Coolant Motor Plate	1
36		Coolant Tank	1
37		Auger Shoot	1
38		Rubber Anti-Splash Guards	2
39		Chip Auger Screw MC-45	1
39	BEN-1710	Chip Auger Screw MC-60	
40		Chip Auger Trough	1
41	MSM-2884	Air Filter Lubricator Regulator, 125 psi.	1
42	SWT-5120	Low Air Pressure Switch	1
43	BEN-1024	Solenoid Valve Airblast 110 Vac MC	1
44	MSE-2604	Washdown Pump 3/4 HP MC	1
45		Washdown Pump Bracket	1
46	BEN-1120	Chip Auger Motor 1/2 HP MC	1
47	BEN-1040	Flood Coolant Pump 1/2 HP MC	1
48		Pressure Reservoir for ATC	1
49	BEN-1050	Fluorescent Light for MC	2